TOSHIBA
Leading Innovation >>>

TOSDIC™-CIE DS/nv
General Description for DCS

The Second Edition

TOSHIBA CORPORATION

Automation Products & Facility Solution Division

EGBK-16069A

Disclaimer

■ Toshiba shall not be responsible for any damage caused by an earthquake, lightning and wind, fire for which Toshiba is not responsible for, acts of a third party, other accidents, the user's willful acts or negligence, misuse, or use in abnormal conditions.
■ Toshiba shall not be responsible for any incidental damage (loss of business profits, interruption of business, change or loss of stored memory) caused by use of or unable to use of this product.
■ Toshiba shall not be responsible for any damage caused by failure to observe the information described in the operation manual.
■ Toshiba shall not be responsible for any damage caused by malfunctions due to combination with any connected device.
■ Toshiba shall not be responsible for any damage caused by malfunctions due to combination with any application program created by the customer.

1. Purposes of this book

TOSDIC™-CIE DS/nv is the flagship model of TOSHIBA DCS for industrial process control & operation.
Purpose of this book is to present the following points as succinctly as possible.

- Overview and Merits
- System Configuration and Scalability
- Primary Components for System
- Standard and Option Packages
- Primary Functions for each Package
- Documents for more details

We hope this gives you a better understanding of **TOSDIC™-CIE DS/nv**.

2. Merits of TOSDIC™-CIE DS/nv

Fig. 1 shows system overview of TOSDIC™-CIE DS/nv.

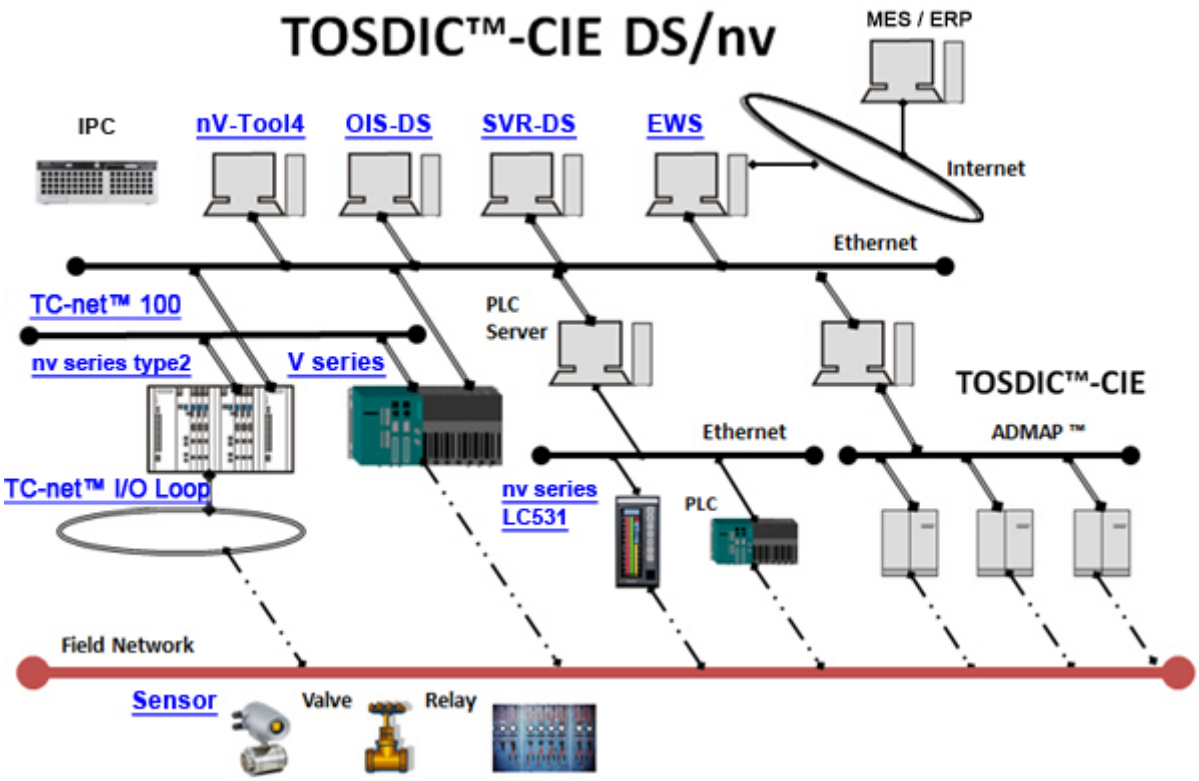

Fig. 1 System Overview of TOSDIC™-CIE DS/nv

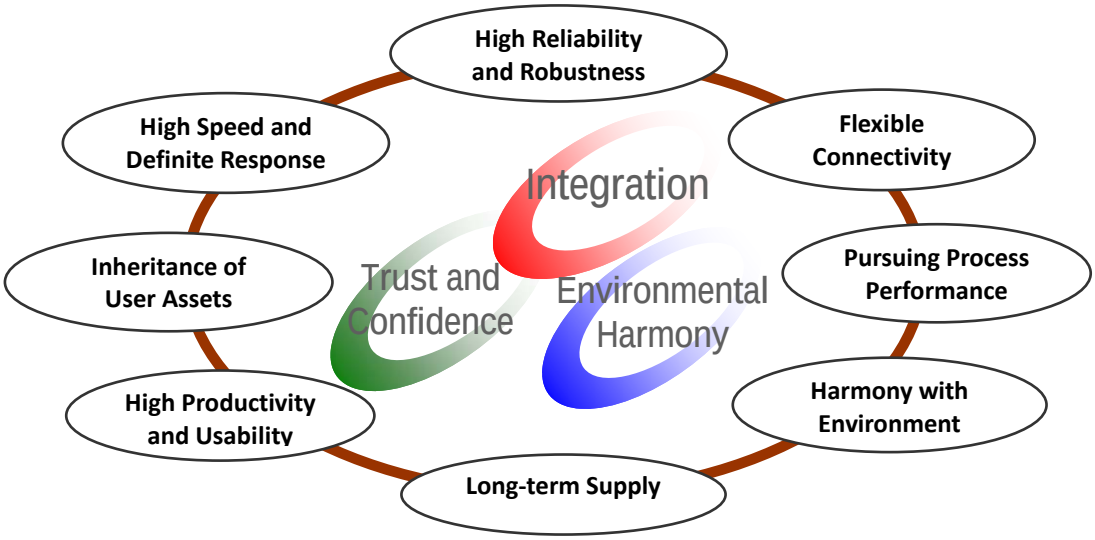

Fig. 2 Merits of TOSDIC™-CIE DS/nv

Keywords of the merits are illustrated in Fig. 2 and explained next.

2.1. High Reliability and Robustness

Networks of TOSDIC™-CIE DS/nv basically consist of four types shown below.

・**Ethernet** :1Gbps/100Mbps :Electrical/Optical
・**TC-net™ 100** :100Mbps :Optical
・**TC-net™ I/O Loop** :100Mbps :Electrical/Optical
・**TC-net™ I/O Bus** :10Mbps :Electrical

Each network system is **dual as standard** to provide the exceptionally high reliability of TOSDIC™-CIE DS/nv system. Remarkably TC-net™ I/O Loop has dual loop topology which can withstand multiple breaks, disconnections or poor contacts without adverse affect on its performance. Most of general network systems utilize switching hubs to which many communication cables are concentrated. TC-net™ I/O Loop does not require the concentrated hubs, so that the system is free from the vulnerability of concentrated switching hub system.
In addition TC-net™ I/O Loop can be built by optical cables as we all as electrical ones. Therefore robust remote I/O subsystem can be configured even if the TC-net™ I/O Loop must be laid in a poor electromagnetic environment.

Control Unit of TOSDIC™-CIE DS/nv basically includes three modules shown below.

・Power Supply Module :**PS891**
・Main Control Module :**PU821**
・Ethernet Interface Module :**FN812**

The control unit is **duplex as standard**, so that it contributes to the high reliability of TOSDIC™-CIE DS/nv. Each module includes **ECC** (Error Checking and Correction) functional memories and original **ASIC** (Application Specific Integrated Circuit), which dramatically reduce number of microelectronic parts and realize the high reliability.

I/O Unit of TOSDIC™-CIE DS/nv consists of;

・nv-series I/O Adapter :**SA9*1(2)**
・nv-series I/O Module

I/O Adapter is **duplex as standard**. To configure mission critical process control loops, a certain LP/AI/AO module can **be duplex.**

Human Interfaces of TOSDIC™-CIE DS/nv basically consists of two types of HMI station;

・**SVR-DS**
・**OIS-DS**

SVR-DS is **duplex as standard**, which has important roles to collect and manage historical data of the system. OIS-DS is single but can be installed **more than one to increases the higher reliability** to watch processes of plant. Even if SVR-DS becomes failed the process operation of OIS-DS is not affected because each Control Unit has a role of process data server for OIS-DS.
Although all functions of OIS-DS and SVR-DS are executed on Windows platform, we recommend and can supply **TOSHIBA Industrial PC pre-installed OIS-DS or SVR-DS** to achieve the ultimate reliability of TOSDIC™-CIE DS/nv.

2.2. High Speed and Definite Response

One of the most important objects of control system is to execute user applications in a fixed cyclic time without degradation of performance. To get closer to this object TOSHIBA originally developed time critical networks shown below and applied them to TOSDIC-CIE DS/nv thoroughly.

・TC-net™ 100 :100Mbps
・TC-net™ I/O Loop :100Mbps
・TC-net™ I/O Bus :10Mbps

Configuration of time critical elements is illustrated in Fig. 3.

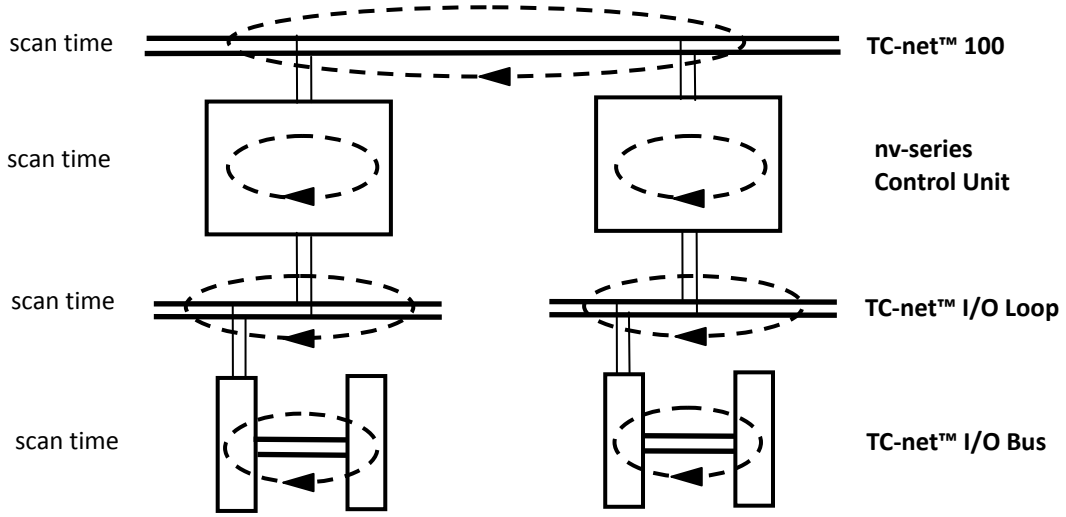

Fig. 3 Configuration of Time Critical Elements

TC-net™ has already certified as an international standard IEC61784-2(CPF11)/ IEC61158(Type11), which achieves **double or more practical throughput** compared with same speed Ethernet.

Control Unit of nv-series can execute user applications in **about half the time V-series controller takes**. To communicate with HMI interfaces like OIS-DS and SVR-DS with high performance, Control Unit also provides **1Gbps Ethernet interface**.

Due to the high throughput of TC-net™, each control application performance depends upon almost main or high speed scan time of Control Unit.

2.3. Flexible Connectivity

Connectivity of TOSHIBA DCS is shown in Fig. 4.

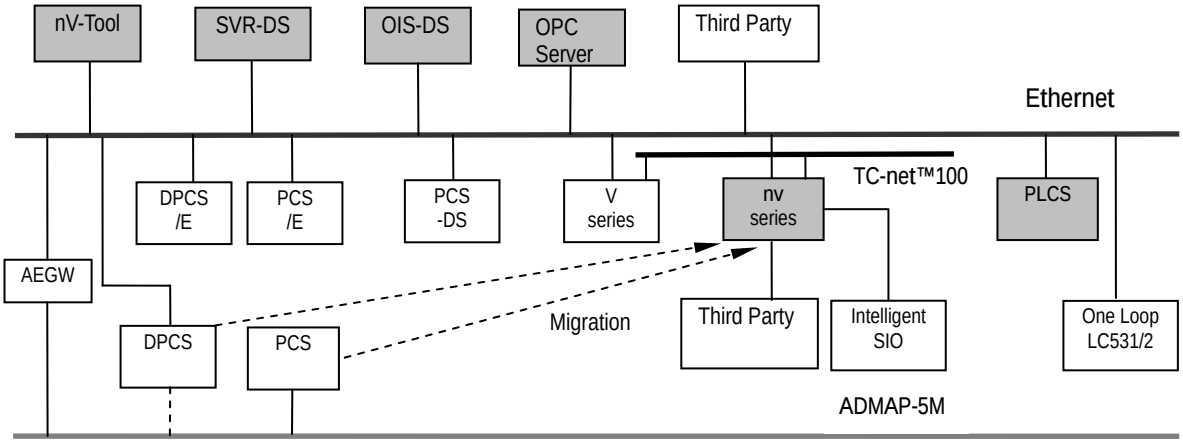

Fig. 4 Connectivity of TOSHIBA DCS

(1) Connectivity to TOSHIBA's Controllers or I/O Subsystem

TOSHIBA has been launching the following controllers into process control market.
DPCS, PCS, DPCS/E, PCS/E, PCS_DS, V-series
All the legacy controllers can be connected to Ethernet and managed by SVR-DS and OIS-DS. PCS is managed via AEGW (ADMAP/Ethernet Gateway). nv-series Control Unit can be connected to V series via TC-net™ 100.
TOSHIBA's Intelligent Serial I/O subsystem can be connected to nv-series Control Unit via Serial I/O interface module.
TOSHIBA's One-loop controller LC531/2 can be connected to Ethernet and managed by **PLCS** and OIS-DS.
PLCS can be connected to some **third party PLC**s as well as TOSHIBA PLC and manages the process data.

(2) Connectivity to Third Party Equipments and Applications

Control Unit of nv-series can be connected to;
・Third party **Ethernet TCP/IP equipments** via Ethernet Interface of nv-series
・Third party **Modbus TCP/IP equipments** via Ethernet Interface of nv-series
・Third party **Modbus Serial equipments** via Modbus I/O Interface of nv-series
・Third party **FL-net equipments** via FL-net interface of nv-series

OPC Server exposes and supplies all the tagged process data and events to OPC Clients. Any **third party OPC client** application can connect to the OPC Server via Ethernet.

(3) Connectivity to Intelligent Field Devices

Control Unit of nv-series can connect **HART Devices** via PI/O Subsystem of nv-series. The field devices can be managed by **FDT/DTM standard package**.

2.4. Inheritance of User Assets

Migration method from discontinued legacy controllers to nv-series is prepared by TOSHIBA.

If you have **DPCS or PCS,** retaining the terminal blocks and connecting them to new I/O Unit of nv-series can be done. It is very simple to reduce on-site cost and time of migration. Conversion from DPCS or PCS application can be supported by nV-Tool.
If you have **MCS or PCS-DS**, retaining the legacy Intelligent Serial I/O subsystem and connecting them to new Control Unit of nv-series via S**erial I/O Interface module** can be done simply.
If you have **V-series** controller, most of user program can be applied to Control Unit of nv-series using nV-Tool.
TOSDIC-CIE DS/nv inherits and utilizes most of existing user assets, and accomplishes migration to more advanced DCS easily and economically.

2.5. Pursuing Process Performance

TOSHIBA owns core technologies of APC (Advanced Process Control) and presents excellent solutions to improve customer's process operation. In fact TOSHIBA has been originally developing and launching APC into market, as shown below.

・**Two Degree of Freedom PID Control (Hyper PID)**
・**Model Driven PID Control (MD-PID)**
・**Advanced Feed Forward Control**
・**Advanced Combustion Control**
・**Advanced Flue Gas O2/CO Trim Control**

Especially TOSDIC™-CIE DS/nv has advantages to reduce energy and cost of combustion process operation, for example boiler or industrial furnace, by optimizing the control performance. Applying the following packages to **PU821** or **LC531** enables process engineers to optimize each process control performance.

・**New Instrument Function Block Library** supplies frequently-used feedback controls and sequence controls.

・**nv-ADCOP** supplies not only the APC Function Block Library but also the following optimizing functions.
・**System Identification** to find process parameters of control loop
・**Control Optimization** to decide optimal control parameters for each identified process
・**Performance Evaluation** to confirm the improvement of the improved control performance

2.6. High Productivity and Usability

(1) Creating Identified Tag Instruments and Variables

Each Tag Instrument can be defined from scratch using **New Instrument Tag Editor**. New Instrument Tag Editor may help you import/export a batch of Tag Instruments described in spread sheet file like Microsoft Excel and create process database of system in **nV-Tool4**.
Each name of Tag Instruments or Network Variables is identified in System scope. Each name of Controller Variables and I/O Variables is done in Controller scope. Each name of Local Variables is in Program/Function/ Function Block scope. If once you define the identified name in nV-Tool4, you can refer it to connect to Tag Instrument and load/save variables in your Program, Function and Function Blocks.

(2) Making Control Applications

Each program can be created by **Full-graphic Program Editor** of nV-Tool4. The programming method is based on **IEC61131-3** which defines control programming configuration and languages.

New Instruments Function Block Library or **nv-ADCOP Library** can supply frequently-used function blocks for process control application, which reduce programming time.

Worksheet Editor is stand-alone full-graphic editor which allows user to draw control application diagrams on a PC. Each diagram can be exported and imported to nV-Tool.

DCS programming may be simplified by accepting traditional engineering style. For example, **Control Loop Diagrams (CLD)**, **Internal Block Diagrams (IBD)** beyond IEC61131-3 may be welcomed. **Custom Symbol Editor** of nv-Tool permits the engineering users to develop their own logic symbols and to draw CLD and IBD. **Decision Table Editor** is also available to create conventional sequence steps.

(3) Making Process Graphic Views

It is so easy to create customer's process graphic views using some models of **OIS-DS Graphic Editor**. **OIS-DS Graphic Simulator** allows an engineer to test the behaviors of his graphic views without practical controller.

(4) Online Maintenance

Control Unit of nv-series fully manages all of the process Tag Instruments. **New Instrument Tag Editor** allows engineers to add, edit and delete a Tag on-line. OIS-DS and SVR-DS acknowledges such changes of Tag settings automatically.
In addition online-program loading to Control Unit is also available using **nV-Tool4**.

(5) Multi User Engineering

In a large scale control system, many engineers have to make and debug their application programs. nV-Tool enables them to build and test their programs rapidly by using the following add-in packages.

nv-Simulator can execute control applications in a general Windows PC.
It is very useful to test and watch application behavior without practical nv-series Control Unit. Even large application that needs a Control Unit or more can be tested by connecting one or more PC in which nv-Simulator is installed.

nV-Tool Client/Server version to allow several engineers to build and test control applications concurrently.
It enables a team of engineers to build a large system so efficiently.

2.7. Environmental Consciousness

Each nv-series hardware module consists of parts environment-friendly and meet **RoHS** directive.
TOSHIBA uses specific **lead free solder** and **coating materials** for PCB manufacturing. These have been verified as suitable for operation under harsh industrial environmental conditions (temperature, moisture, vibration, gas, etc).

2.8. Long-term Supply Guarantee

Unified Controller nv-series was launched into market in October 2010 and has been adopted by many users.
TOSHIBA offers a minimum product life of 20 years for supply, quality assurance and maintenance services and will support process control and operations of customers continuously during this time.
The support is phased with the supply of nv-series equipment for a minimum of ten years, spare parts available for additional four years, and further six years send back to factory repair service.

3. Overview of TOSDIC™-CIE DS/nv

3.1. Overview of Control Network Subsystem

Control network subsystem of TOSDIC-CIE DS/nv is illustrated in Fig. 5.

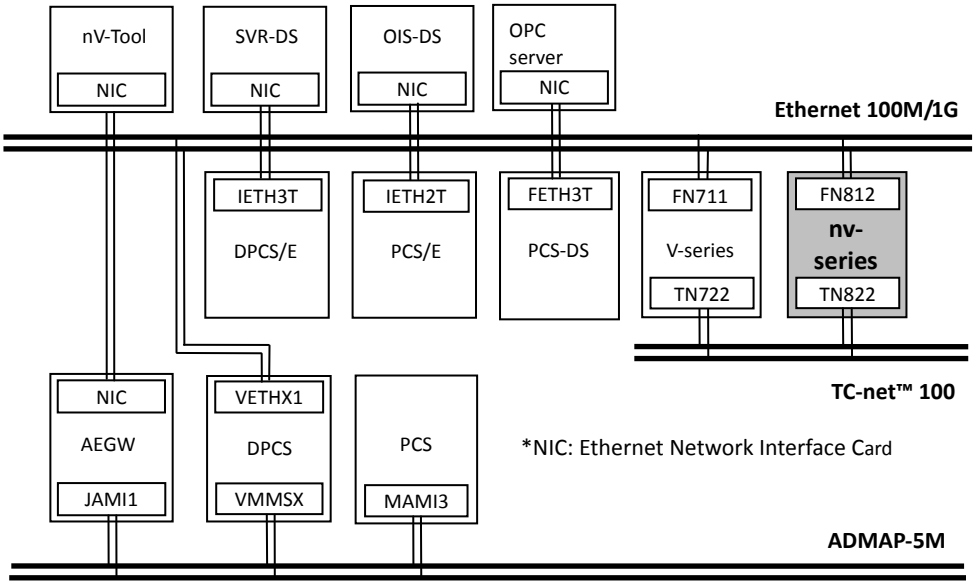

Fig. 5 Control Network Subsystem of TOSDIC™-CIE DS/nv

Control Network Subsystem consists of the following three networks.

- **Ethernet :100Mbps/1Gbps**
- **TC-net™ 100 :100Mbps**
- **ADMAP-5M :5Mbps**

Each network cable and its interface can be duplex and operate in a redundant mode.

Ethernet is general industrial LAN (Local Area Network), which can connect controllers, gateway and human interfaces shown in Fig. 5. 1 Gbps transmission speed on Ethernet is available for the following nodes;

- **Ethernet Module :FN8*, EN8* of nv-series**
- **Ethernet NIC (Network Interface Card)**

TC-net™ 100 is one of the international standard industrial networks which performs ms-order high speed transmissions without collision and can connect V-series and nv-series controllers.

ADMAP-5M is also an industrial network which performs scan transmissions without collision. It connects OIS, PCS and DPCS which are stations of legacy TOSDIC-CIE system. These stations and the spare parts had already discontinued for sales. The first stage of System Migration is to add **AEGW** (ADMAP Ethernet Gateway) to the system in order to permit OIS-DS and SVR-DS to manage the legacy control stations and all of the process data. Essential migration from DPCS/PCS to nv-series Control Unit is also ready to go.

3.2. Overview of Human Machine Interface Subsystem

Three types of HMI (Human Machine Interface) subsystem are presented in Fig.5, 6 and 7.

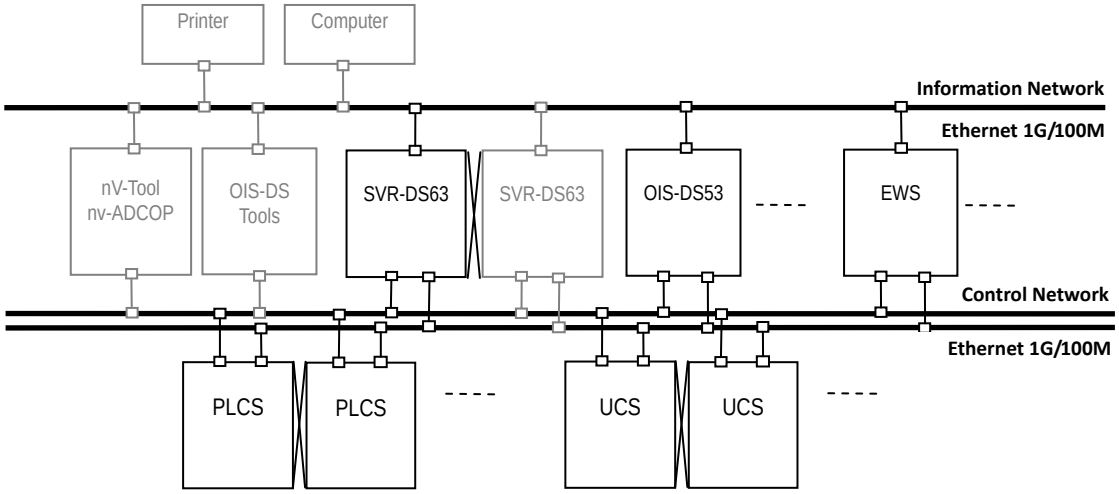

Fig. 6 Large Scale HMI Subsystem

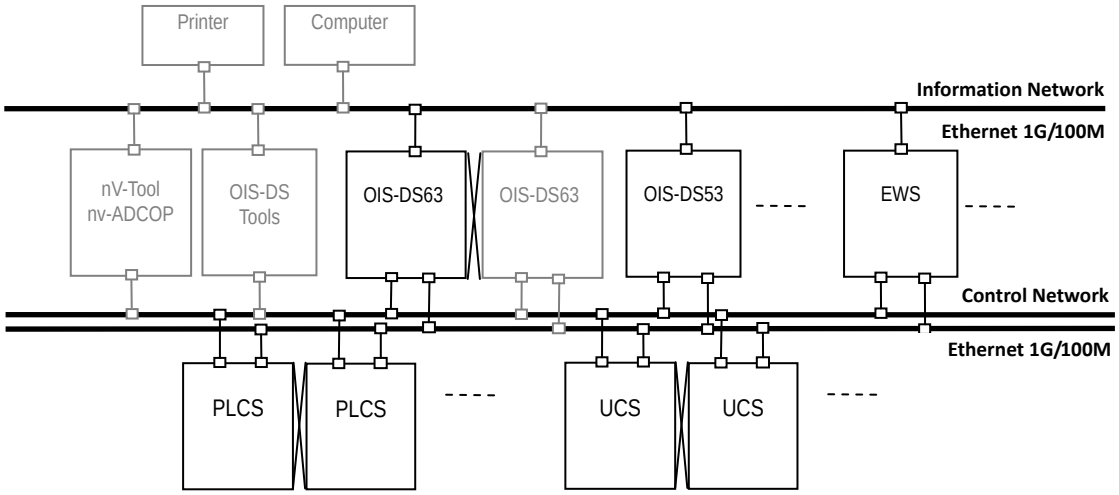

Fig. 7 Middle Scale HMI Subsystem

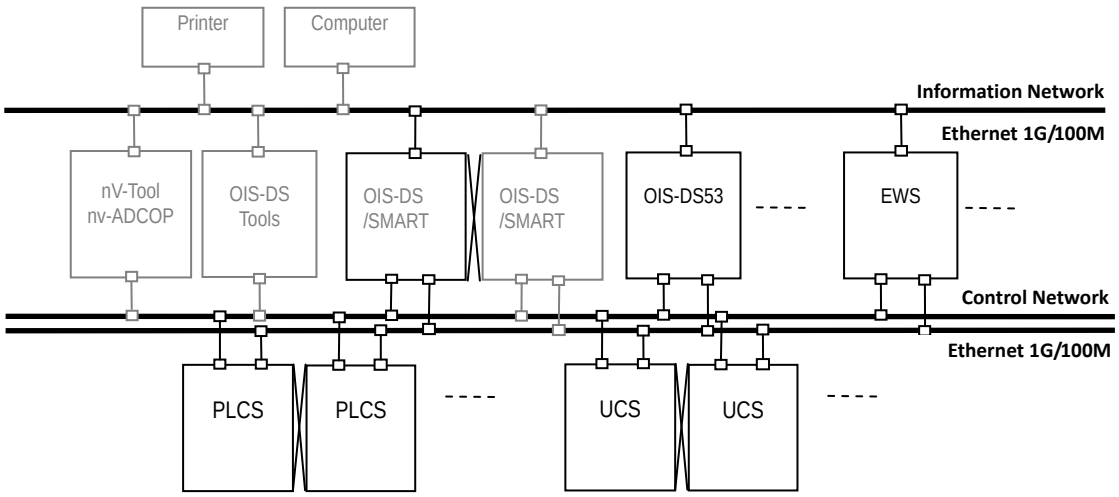

Fig. 8 Small Scale HMI Subsystem

3.2.1. Scalability of HMI Subsystem

Each scalability of the HMI Subsystems is shown below.

Scale Factor\System	**Large Scale HMI SVR-DS63+OIS-DS53**	**Middle Scale HMI OIS-DS63+OIS-DS53**	**Small Scale HMI OIS-DS/SMART+OIS-DS53**
No. of Servers	1 (duplex or single)	1 (duplex or single)	1 (duplex or single)
No. of Clients	22	16	8
No. of Control Units	32 (duplex or single)	32 (duplex or single)	32 (duplex or single)
No. of Process Tags	20,000	8,000	4,096
No. of Historical Tags	5,000	2,500	1,250
No. of Graphic Views	4,096	4,096	4,096

Table 1 Scalability of HMI Subsystem

The Servers in Table 1 include SVR-DS63s or OIS-DS63s or OIS-DS/SMARTs.
SVR-DS63 is a standard server of TOSDIC™-CIE DS/nv.
OIS-DS63 consists of functions of both SVR-DS63 and OIS-DS53.
OIS-DS/SMART consists of functions of SVR-DS63, OIS-DS53 and PLCS.
Each of above servers can be **duplex configurable**.

The Clients in Table 1 include OIS-DS53s and EWSs.
OIS-DS53 is a standard client of TOSDIC™-CIE DS/nv and can be multi installed.
EWS is an optional client for user application of TOSDIC™-CIE DS/nv and can be multi installed.

EWS specification is shown below.

Item	Specification
No. of EWS	8

Table 2 EWS specification of Control Unit Subsystem

Control Units in Table 1 include UCSs and PLCSs**.**
UCS is a standard controller of TOSDIC™-CIE DS/nv.
PLCS is an optional controller server to connect PLCs and LCs.
Each of above controllers and servers can be **duplex configurable**.

PLCS specification of Control Unit Subsystems is shown below.

Item	Specification
No. of PLCS	8 (duplex or single)

Table 3 PLCS specification of Control Unit Subsystem

3.2.2. OIS-DS Packages

OIS-DS is a client station of TOSDIC-CIE DS/nv system, which has the following software packages.

Package	Type	Objects
OIS-DS Standard	Standard	Menu Point Group Historical Trend System Status Alarm Summary History Graphics etc
16-Tag Group Package	Option	Supports up-to 16 Tag Instruments per Group
Real Time Trend Package	Option	Supports Real Time Trend
OIS Navigation Package	Option	Supports Multifunctional Navigator Windows
2CRT OIS Package	Option	Supports Two CRT display for each OIS-DS.
Remote OIS Package	Option	Support Remote OIS via Intranet or Internet
Analog Recorder Support Package	Option	Supports analog outputs for recorder
Advanced Hardcopy Package	Option	Supports color conversion for printing
Historical Data Auto-save Package	Option	Supports auto-saving of Historical data
OIS-DS Part11 Package	Option	Supports functions of CFR Part11 of FDA
DPCS Package	Option	Support Tag Instruments of legacy DPCS
2PC Package	Option	Support Tag Instruments of legacy PCS
Report Package	Option	Support settings for OIS-DS/SVR-DS manages various monitoring functions, OIS tags, trend data and etc.
Alarm Management Package	Option	Supports alarm management for operators

Table 4 OIS-DS Packages

3.2.3. SVR-DS Packages

SVR-DS is a server station of TOSDIC-CIE DS/nv system, which has the following software packages.

Package	Type	Objects
SVR-DS Standard	Standard	Database of Historical data, Report, Mirroring Background processing of System Clock, Redundancy, OIS Tag (internal instrument tag), Guidance and Event Engineering SVR configuration Scheduling and Libraries for User Applications Services for Message Printing and External Alarm Output
Analog Recorder Support Package	Option	Supports analog outputs for recorder
Alarm Management Package	Option	Supports alarm management for operators

Table 5 SVR-DS Packages

3.2.4. EWS Packages

EWS is an optional client for application of TOSDIC-CIE DS/nv system, which has the following software packages.

ONS Support Package	Option	Enables all of the process data access from client application
OPC DA 2.0 Sever Package	Option	Exposes every Tag data of TOSDIC-CIE DS/nv to any OPC Client applications.
OPC AE 1.1 Sever Package	Option	Exposes every Tag Alarm & Event of TOSDIC-CIE DS/nv to any OPC Client applications.

Table 6 EWS Packages

3.2.5. PLCS Packages

PLCS is an optional controller server to connect PLCs and LCs, which has the following software packages.

PLCS Support Package	Option	Enables system to connect some kinds of PLC and LC and manage the data as OIS Tag Instruments.
T3H Support Library	Option	Connects PROSEC T3H to PLCS
MELSEC Support Library	Option	Connects MELSECNET/H to PLCS

Table 7 PLCS Packages

3.2.6. OIS-DS/SMART Packages

OIS-DS/SMART Package is a high cost performance one to build integrated SCADA System for DCS, PLC and Single-Loop Controller. The two types of OIS-DS/SMART Package are supplied as shown below.

Included Function	**OIS-DS/SMART with Engineering Package**	**OIS-DS/SMART without Engineering Package**
OIS-DS Standard	included	included
16-Tag Group Package	included	included
Real Time Trend Package	included	included
OIS-DS Engineering Tool	included	-
OIS-DS Graphic Editor	included	-
SVR-DS Standard	included	included
PLCS Support Package	included	included
PLCS Engineering Tool	included	-

Table 8 OIS-DS/SMART Packages

3.3. Overview of Control Subsystem

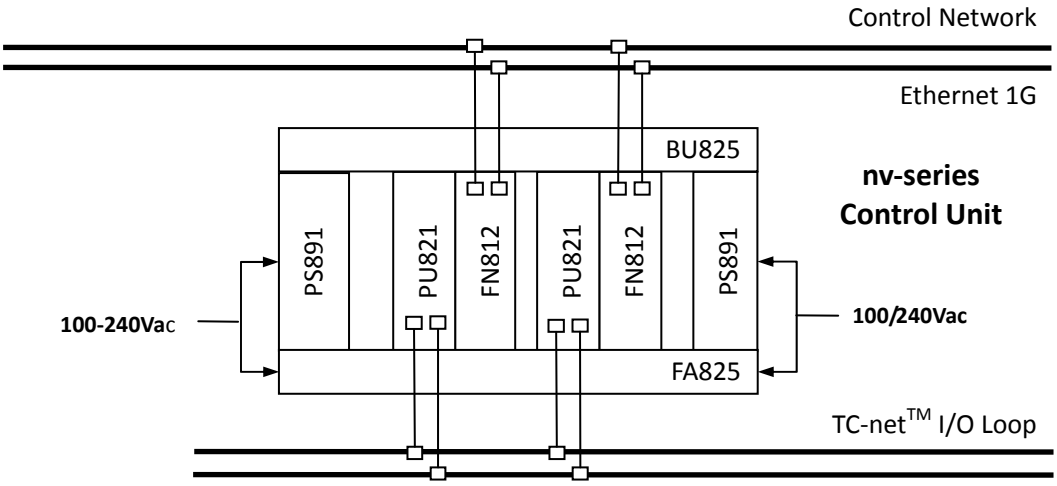

Fig. 9 Configuration of Control Subsystem

Control Subsystem of TOSDIC-CIE DS/nv consists of BU825, FA825, PS891, FN812 and PU821 as shown in Fig. 9.

3.3.1. Scalability of Control Subsystem

Scalable Factor	Value
No. of Control Tag Instruments (Indicator)	1,024
No. of Control Tag Instruments (Controller)	320
No. of Control Tag Instruments (Pushbutton)	1,280
No. of Control Tag Instruments (Sequence Operation)	128
No. of Control Tag Instruments (Timer/Counter)	128
No. of Control Tag Instruments (Data Block)	128
No. of User Programming Capacity	512 kstep
No. of POU (main scan program)	512
No. of POU (high speed scan program)	128
Total No. of POU (includes function and function block)	2,000

Table 9 Scalability of Control Subsystem

3.3.2. Available Configuration of Control Subsystem

Component	Type	Objects
BU825	Standard	19 inch rack for redundant Control Unit
FA825	Standard	Fun unit for BU825 with redundant power inputs
PS891	Standard	Power Supply 100-240Vac
FN812	Standard	Ethernet 1000BASE-T dual port interface with ONS Server
PU821	Standard	Main CPU as DCS Ethernet 100BASE-T dual port interface for TC-net I/O Loop
SN821	Option	Legacy Intelligent SIO Subsystem Interface 2 ports for intelligent SIO Bus

Table 10 Available Configuration of Control Subsystem

3.4. Overview of Process I/O Subsystem

Process I/O subsystem of the TOSDIC-CIE DS/nv is shown below.

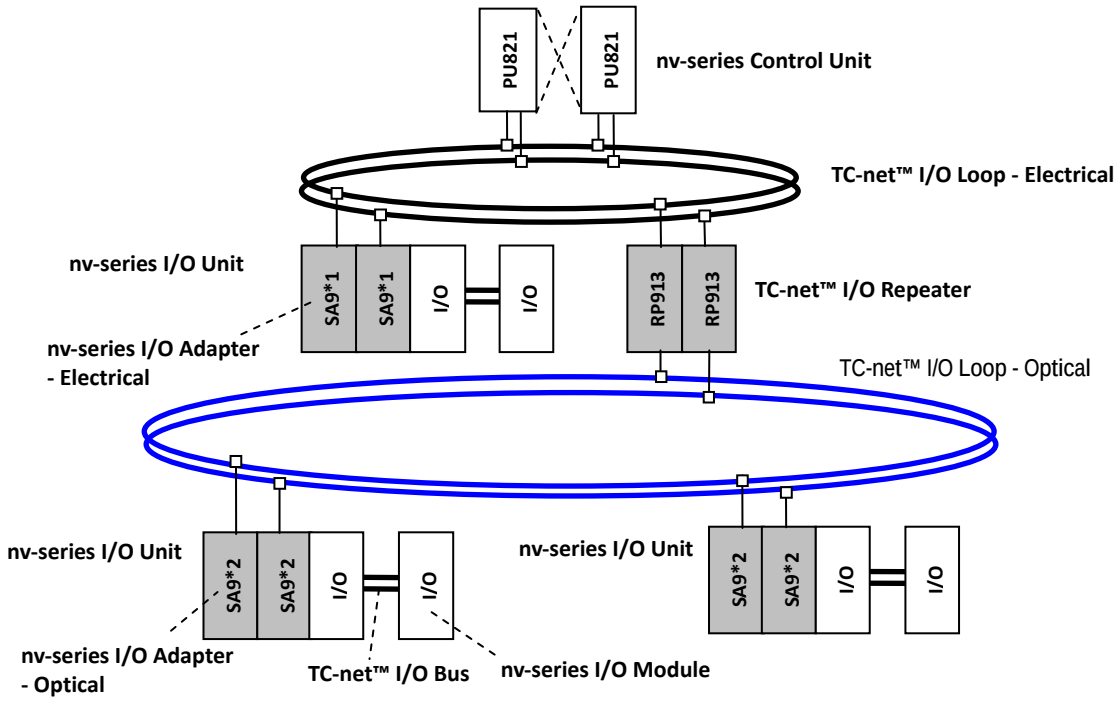

Fig. 10 Process I/O Subsystem of TOSDIC-CIE DS/nv

Process I/O Subsystem of TOSDIC-CIE DS/nv consists of the following five elements.

- ・TC-net™ I/O Loop :A loop type network between PU821 and I/O Adapters. Electrical or Optical type.
- ・TC-net™ I/O Bus :A bus type network between I/O Adapter and I/O Modules.
- ・TC-net™ I/O Repeater :A repeater between electrical loop and optical one.
- ・nv-series I/O Adapter :An adapter to connect I/O Loop with I/O Buses. Electrical or Optical type.
- ・nv-series I/O Module :A I/O module or Fieldbus network interface.

TC-net™ I/O Loop **shares 64 KW** memories in a Process I/O Subsystem.
TC-net™ I/O Loop performs **high speed scan 0.1 ms and middle speed scan 1ms** or more.

3.4.1. Scalability of Process I/O Subsystem

Scale Factor	Value
No. of I/O Adapters in a I/O Loop	32
No .of I/O Repeaters in a I/O Loop Electrical	2
No. of I/O Repeaters in a I/O Loop Optical	1
No. of I/O Module in a I/O Bus	16
Length of Electrical Cable of I/O Loop between neighbors	10m
Total Length of Electrical Cables of a I/O Loop	100m
Length of Optical Cable of I/O Loop between neighbors	2km
Total Length of Optical Cables of a I/O Loop	4km
Total Transmission Length of I/O Bus	5m

Table 11 Scalability of Process I/O Subsystem

3.4.2. Available Configuration of Process I/O Subsystem

Usage	I/O Unit	I/O Adaptor	I/O Module	TBU	Specification
PI/O Unit for DCS	BU901	SA961 /SA962	DI935	BU905	64 Digital Inputs 24Vdc
			DO935	BU905	64 Digital Outputs 24Vdc
			AI969	BU903A	16 Analog Inputs 1-5Vdc
			RT918	BU902A	8 RTD Inputs (channel isolation)
			TC919	BU904A	16 THC Inputs + 1CJC
			AI9A9B	BU903A	16 Analog Inputs 4-20mA *duplex disable
			AI9H9B	BU903A	16 Analog Inputs 4-20mA with HART *duplex disable
			AO9A9B	BU902A	16 Analog Outputs 4-20mA *duplex disable
			AO9H9B	BU902A	16 Analog Outputs 4-20mA with HART *duplex disable
			PI948	BU902A	8 Pulse Inputs
			PO919	BU902A	16 Pulse Outputs
			IS911	BU901	Serial Communication to SYSMAC/MELSEC
PI/O Unit for General	BU901	SA911 /SA912	DI934	BU902A	32 Digital Inputs 24Vdc
			DI934S	BU902A	32 Digital Inputs + 2 Strobes 24Vdc
			DI935	BU905	64 Digital Inputs 24Vdc
			DI936	BU902A	16 Digital Inputs 24Vdc
			DI937	BU902A	16 Digital Inputs 24Vdc
			DI944	BU902A	32 Digital Inputs 48Vdc
			IN956	BU906A	16 Digital Inputs 100/120Vac, 100/120Vdc
			IN966	BU906A	16 Digital Inputs 200/240Vac
			DO934	BU902A	32 Digital Output 24Vdc
			DO935	BU905	64 Digital Output 24Vdc
			DO936	BU906A	16 Digital Output 24Vdc, 2A
			AC963	BU906A	16 Digital Outputs 100/240Vac, 2A
			RO966	BU906A	16 Digital Outputs 24Vdc/240Vac, 2A
			AI914	BU903A	4 Analog Inputs 0-5Vdc
			AI918	BU903A	8 Analog Inputs 0-5Vdc
			AI918D	BU902A	8 Analog Inputs 0-20mA with Distributor
			AI918F	BU903A	8 Analog Inputs 0-5Vdc
			AI919	BU903A	16 Analog Inputs 0-5Vdc
			AI928	BU903A	8 Analog Inputs 0-20mA
			AI929D	BU902A	16 Analog Inputs 4-20mA with Distributor
			RT918	BU902A	8 RTD Inputs (channel isolation)
			RT918C	BU902A	8 RTD Inputs (no channel isolation)
			TC919	BU902A	16 THC Inputs + 1CJC
			AO928	BU902A	8 Analog Outputs 0-20mA
			AO928F	BU902A	8 Analog Outputs 0-20mA
			AO929	BU902A	16 Analog Outputs 0-20mA
			PI918	BU902A	8 Pulse Inputs, 12-24Vdc
			PI924	BU902A	4 Bi-Pulse Inputs, 12-24Vdc
			MD911	BU901	Modbus Serial RS485
			FL911	BU901	FL-net 10/100BASE-T
			EN911	BU901	Ethernet 10/100BASE-T
			IS911	BU901	Serial Communication to SYSMAC/MELSEC
PI/O Unit for SOE	BU901	SA9A1	DI936	BU902A	16 Digital Inputs 24Vdc
			DI934	BU902A	32 Digital Inputs 24Vdc
			DI944	BU902A	32 Digital Inputs 48Vdc
			AI919	BU903A	16 Analog Inputs 0-5Vdc
PCS Migration	BU927F	SA961 /SA962	DI935	existing	64 Digital Inputs 24Vdc
			DO935	existing	64 Digital Outputs 24Vdc
			AI969	existing	16 Analog Inputs 1-5Vdc
			RT918	existing	8 RTD Inputs (channel isolation)
			TC919	existing	16 THC Inputs + 1CJC
			AI9A9B	existing	16 Analog Inputs 4-20mA *duplex enable
			AI9H9B	existing	16 Analog Inputs 4-20mA with HART *duplex enable
			AO9A9B	existing	16 Analog Outputs 4-20mA *duplex enable
			AO9H9B	existing	16 Analog Outputs 4-20mA with HART *duplex enable
			PI948	existing	8 Pulse Inputs
			PO919	existing	16 Pulse Outputs
DPCS Migration	BU928F	SA931	LP918B	existing	12 Analog Inputs 1-5Vdc, 8 Analog Output 4-20mA 8 Digital Inputs 24Vdc, 8 Digital Outputs 24vdc
	BU929F	SA911 /SA912	DI934I	existing	32 Digital Inputs 24Vdc
			DO934	existing	32 Digital Outputs 24Vdc
			AI969	existing	16 Analog Inputs -5～+5Vdc
			RT918	existing	8 RTD Inputs (channel isolation)
			TC919	existing	16 THC Inputs + 1CJC
			AO928	existing	8 Analog Outputs 0-20mA
			PI948	existing	8 Pulse Inputs 2～30Vp-p

Table 12 Available Configuration of Process I/O Subsystem

3.4.3. Connecting Intelligent SI/O Subsystem

nv-series Control Unit can connect **legacy Intelligent SI/O Subsystem via SB812**.
SB812 has two serial bus of Intelligent SI/O Subsystem. PU821 can host two SB812, therefore nv-series Control Unit can manage up to four serial bus of Intelligent SI/O, as shown below.

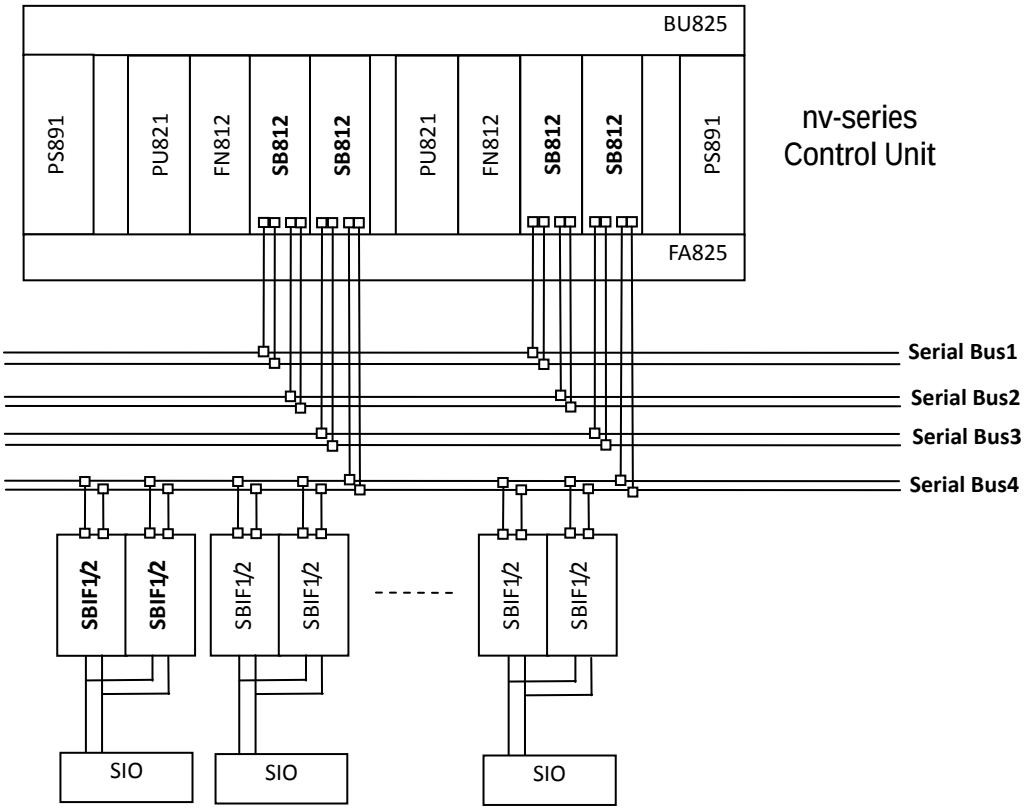

Fig. 11 Connection to Legacy Intelligent Serial I/O Subsystem

3.5. Overview of Field Network Subsystem

Field networks include five types of network, Modbus-TCP, Modbus-Serial, FL-net, Serial for PLC and HART. The network configurations and the scalability are shown below.

3.5.1. EN811: Modbus-TCP Client

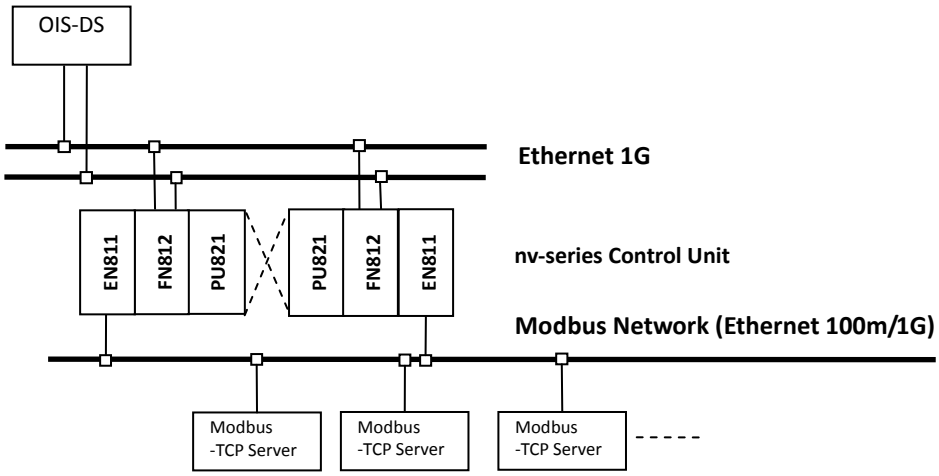

c

Scale Factor	Value
No. of Sockets for Modbus-TCP Client	48

Fig. 12 Connection to Modbus-TCP

3.5.2. MD911: Modus-Serial

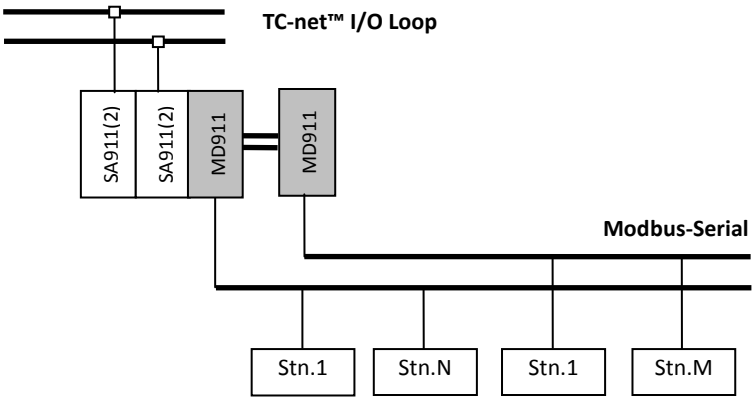

Scale Factor	Value
No. of MD911 in a I/O Bus	4
Total No. of MD911,FL911,EN911 and IS911 under a Control Unit	16
Length of RS232 Cable	15m
Total Length of RS485	500m
No. of Modbus Slave Stations	64

Fig. 13 Connection to Modbus-Serial

3.5.3. FL911: FL-net

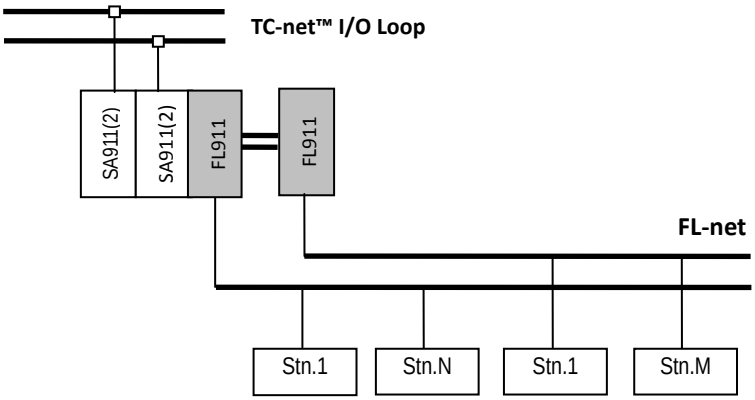

Scale Factor	Value
No. of FL911 in a I/O Bus	4
Total No. of MD911,FL911,EN911 and IS911 under a Control Unit	16
Length of 100BASE-TX or 10BASE-T	100m
No. of Stations	254

Fig. 14 Connection to FL-net

3.5.4. IS911: Serial Communication with PLC

Control Unit nv-series can read/write data without programming from/to PLC via IS911 as shown in Fig. 12. At this moment the supported PLC are **CS1W-SCB41-V1/C500-LK201 of SYSMAC** and **AJ71UC24 of MELSEC**.

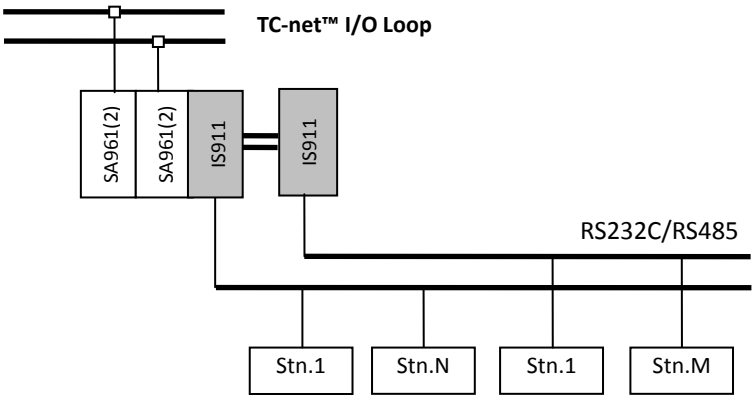

Scale Factor	Value
No. of IS911 in a I/O Bus	4
Total No. of MD911,FL911,EN911 and IS911 under a Control Unit	16
Length of RS232 Cable	15m
Total Length of RS485	500m
No. of PLC Stations	32

Fig. 15 Connection to PLC

3.5.5. AI9H9B/AO9H9B: HART Device Interface

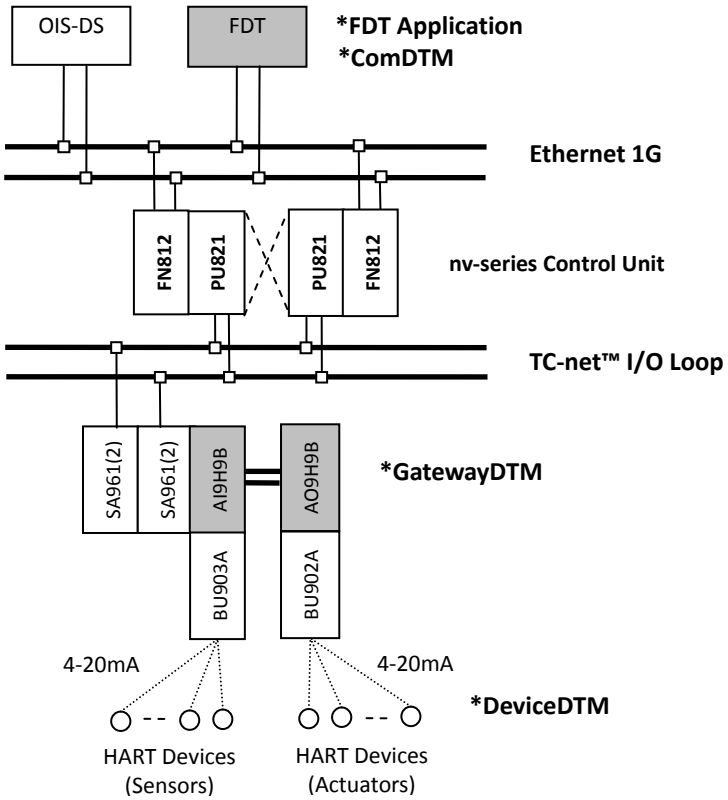

Scale Factor	Value
No. of AI9H9B/AO9H9B modules in a I/O Bus	16
No. of HART Devices in a HART Device Interface	16

Fig. 16 Connection to HART Devices

Based on FDT/DTM International Standard IEC62453, TOSDIC-CIE DS/nv can manage HART devices by using the following components.

(1) FDT/DTM

FDT (Field Device Tool) is a software application by which integrated setting and monitoring field devices like HART can be done.
As an advanced 3rd part product, TOSHIBA recommend **Fieldcare of E+H.**
DTM (Device Type Manager) is a software component which plays each role in any FDT application. **ComDTM** is to communicate with nv-series Control Unit. **GatewayDTM** plays gateway to HART devices. The two DTM will be supplied by TOSHIBA.

(2) Fundamental Hardware

・Ethernet Interface Module :FN812
・Control Module :PU821
・I/O Adapter :SA961(2)
・HART Analog Input Module :AI9H9B
・HART Analog Output Module :AO9H9B

Remarkably AI9H9B/AO9H9B is not conventional multiplexer but has **independent HART channels for each I/O point.**

3.6. Overview of Engineering Subsystem

Engineering Subsystem of TOSDIC-CIE DS/nv consists of the following software packages.

3.6.1. Control Engineering Packages

Package	Objects
nV-Tool - Stand-alone version	Supports control application life cycle from programming control application of IEC61131-3 to maintenance in nv-series and V-series controllers.
New Instrument Tag Editor	Supplies spreadsheet type tag editor for each system.
New Instrument Function Block Library	Supplies frequently-used function blocks such as Hyper PID Control, Advanced Feed Forward Control, Double Cross Limit Control and so on.
Worksheet Editor	Supports full-graphic editor which develops Control Loop Diagrams, Sequence Flow Diagrams and Internal Block Diagrams using LD, FBD and SFC instruction symbols of IEC61131-3 and user defined custom symbols.
nv-Simulator	Simulates Control Unit on a PC to test nv-series control applications without practical Control Unit.
nv-ADCOP	Samples process data in real-time, Identifies process parameters and optimize feedback or feed-forward control. Supplies APC function blocks such as MD-PID and Feed-forward, etc.
nV-Tool – Client/Server version	Shares engineering database in the server. Each client can program and debug concurrently.
Remote Engineering Package	Allows all the human interface programs, for example, nV-Tool and OIS-DS, to be used via Intranet or Internet.
PLCS Engineering Tool	Builds PLC server which reads/ writes PLC data and manages OIS Tag instruments.

Table 13 Control Engineering Package

3.6.2. Human Interface Engineering Packages

Package	Objects
OIS-DS Engineering Tool	Builds settings for OIS-DS/SVR-DS manages various monitoring functions, OIS tags, trend data and etc.
OIS-DS Graphic Editor	Makes user-oriented process graphic views.
OIS-DS Graphic Simulator	Enables to test the graphic views on a PC without practical Control Unit.

Table 14 Human Interface Engineering Package

4. Control Network Subsystem

4.1. Ethernet 1G

To achieve 1G transmission speed in TOSDIC™-CIE DS/nv, network paths among stations, FN821, OIS-DS and SVR-DS shall be configured by 1Gbps switching hubs and suitable cables.
Practically these stations may be installed separately like OIS-DS of central operation room, SVR-DS of server room, and Control Units of field control room. In addition the controllers to be connected may be not only nv-series but also V-series, DPCS and etc. The legacy controllers are limited up to 100Mbps Ethernet interface.
Fig.16 shows a typical example of the Ethernet connection. Note that only single network-A is illustrated.

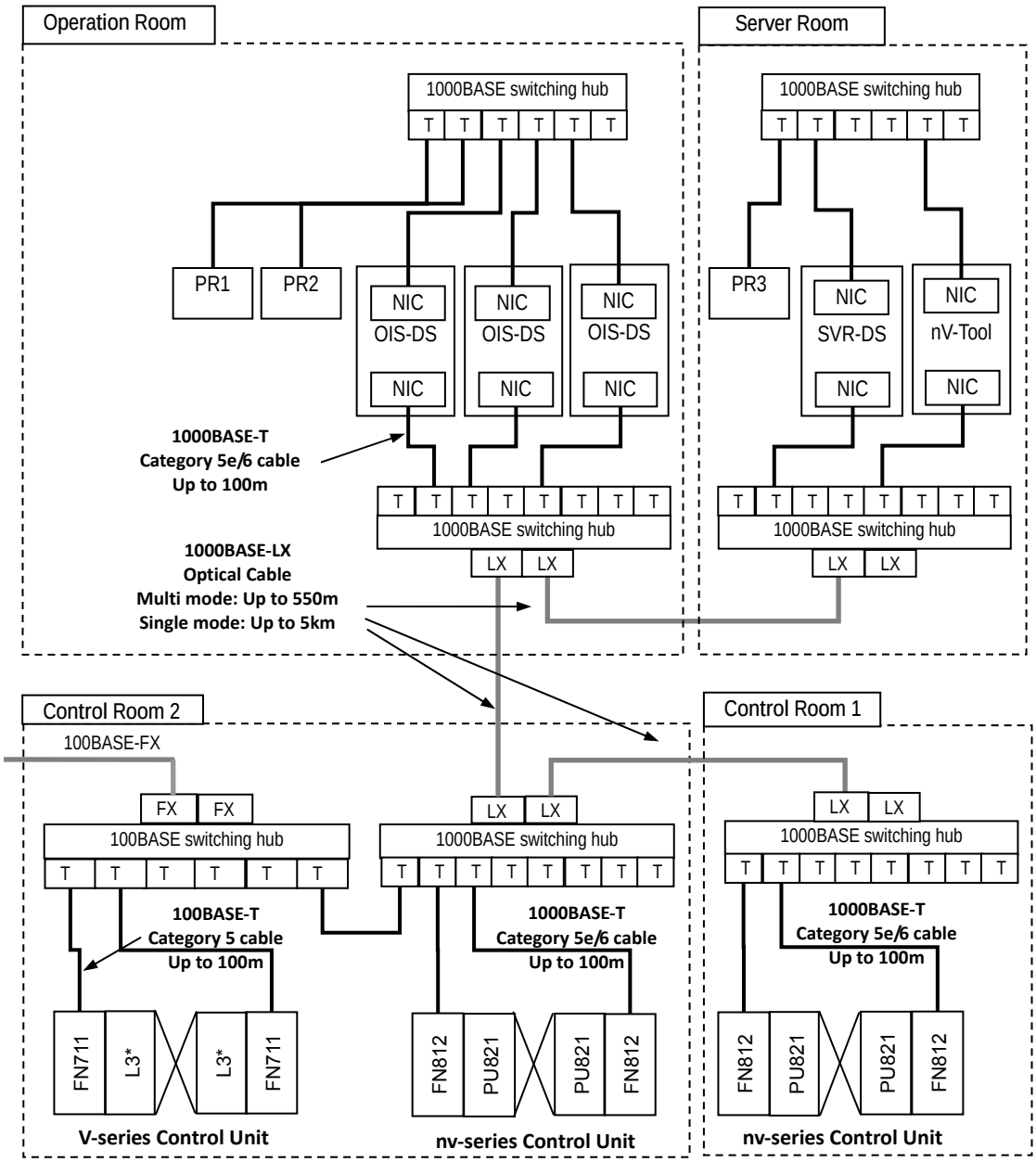

Fig. 17 Network Configuration of Ethernet 1G

1000BASE-T NIC (Network Interface Card) are installed in each OIS-DS, SVR-DS and nV-Tool Engineering Station and connected to 1000BASE-T switching hubs of each room. FN812 which has 1000BASE-T interfaces is also connected to 1000BASE-T switching hubs of control room. The remotely located switching hubs are connected by 1000BASE-LX optical cables. To convert 1000BASE-T to 1000BASE-LX, media converter or switching hub which contains the converter may be used, for example, **'ProCurve 1810G-24 Switch' of Hewlett-Packard TOSHIBA recommends.**

4.2. TC-net™ 100

Fig.17 shows an example to connect separately installed nv-series and V-series stations by TC-net™ 100. Note that only single network –A is illustrated.

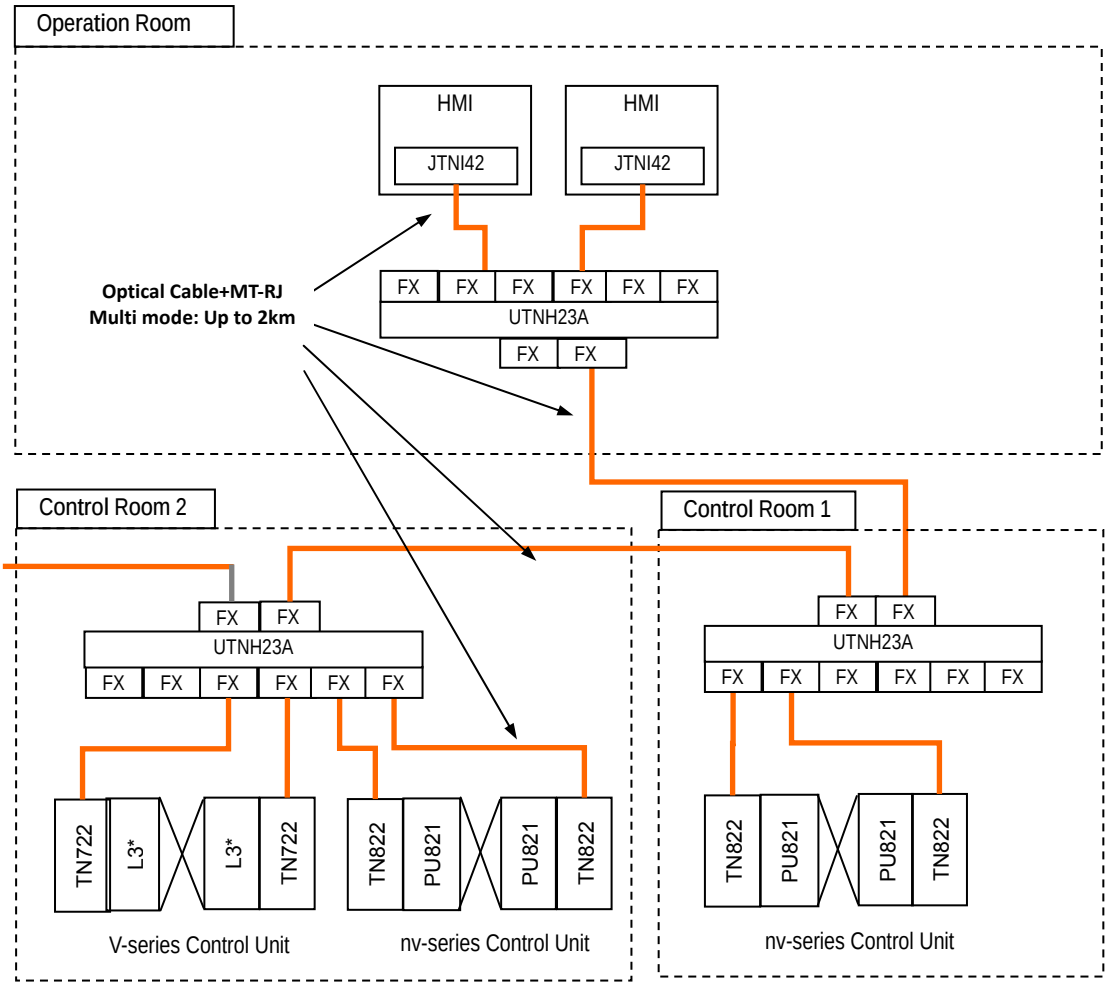

Fig. 18 Network Configuration of TC-net™ 100

The following components can be supplied for this configuration.
Communication Interface of the HMI : JTNI42
Communication Interface of the nv-series controller : TN822
Communication Interface of the V-series controller : TN722
Connecting these interfaces requires a Toshiba shared optical hub (UTNH23A).
Each optical cable is a multimode optical fiber and may be up to 2 km.
To build the network-B, UTNH23B should be used instead of UTNH23A.

5. Human Interface Subsystem

5.1. OIS-DS Standard Functions

OIS-DS is a process operator's station in human interface subsystem. It primarily displays and updates process tag instruments and system status stored in Control Unit or SVR-DS. Basic screens of OIS-DS are shown below.

Screen Name	Screen Image	Remarks
Menu Screen	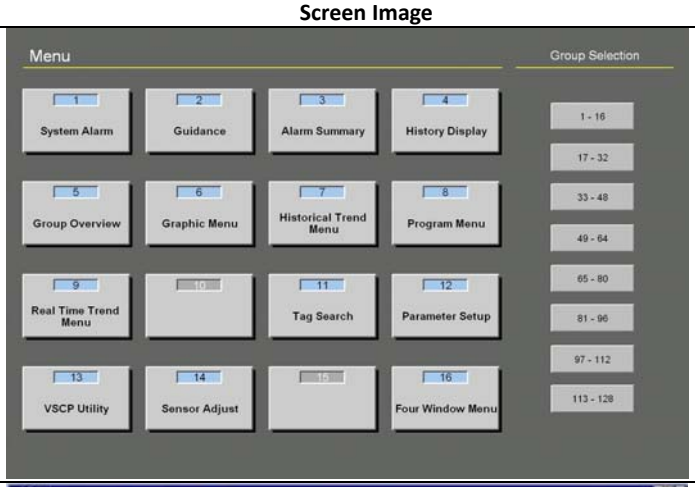	Root screen which provides access to display all screens.
Point Screen		Displays a Tag instrument face plate. Displays a set of Tag parameters Displays trend of Tag data. Operates a tag instrument. Confirms the alarms.
Group Screen	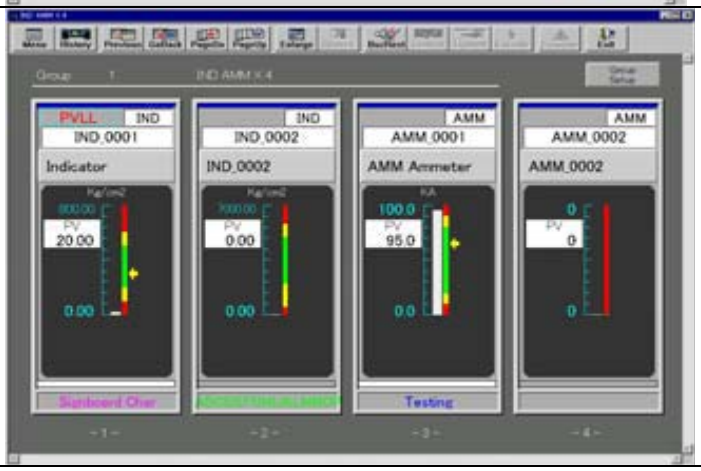	Displays tag group shows four, eight instrument. Operates eight loop simultaneously If operator's keyboard is installed.

Fig. 19 OIS-DS Standard Functions (1/4)

Screen Name	Screen Image	Remarks
Historical Trend Screen	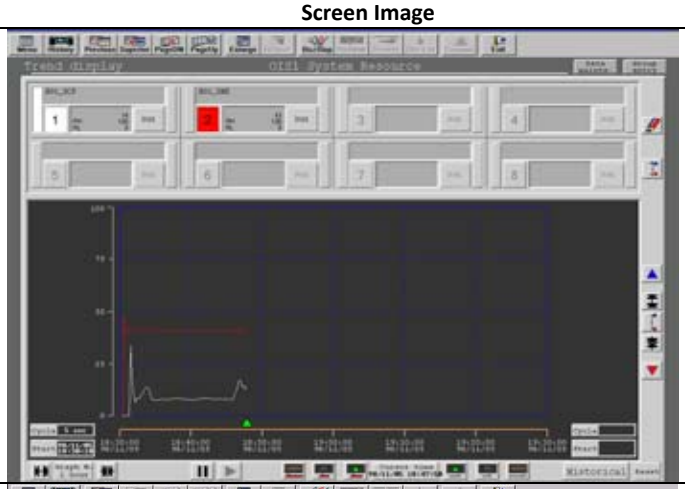	Displays trend of long term data captured by SVR/DS Up to eight points displayed on each page.
Guidance Screen	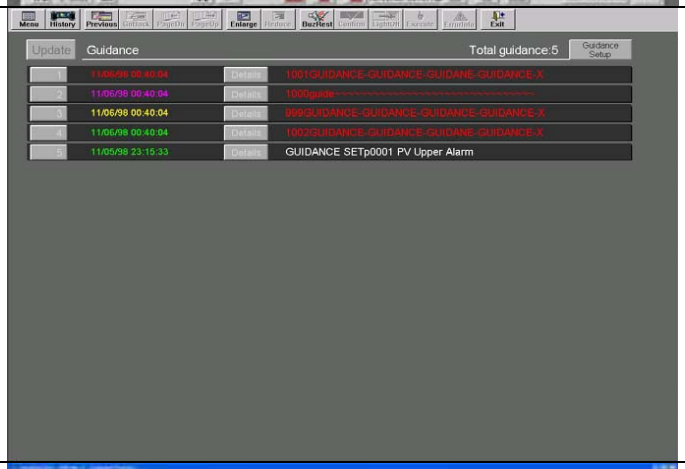	Displays Operator's Guide Message which user defines.
System Status Screen	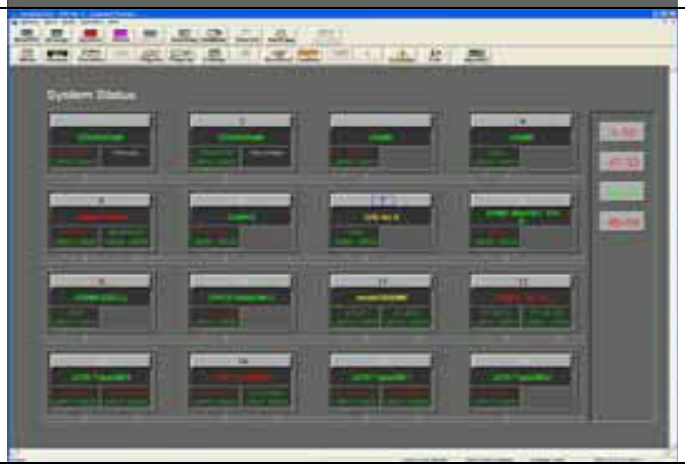	Displays and updates every status and diagnosis of TOSDIC-CIE DS/nv.

Fig. 20 OIS-DS Standard Functions (2/4)

Screen Name	Screen Image	Remarks
Alarm Summary Screen	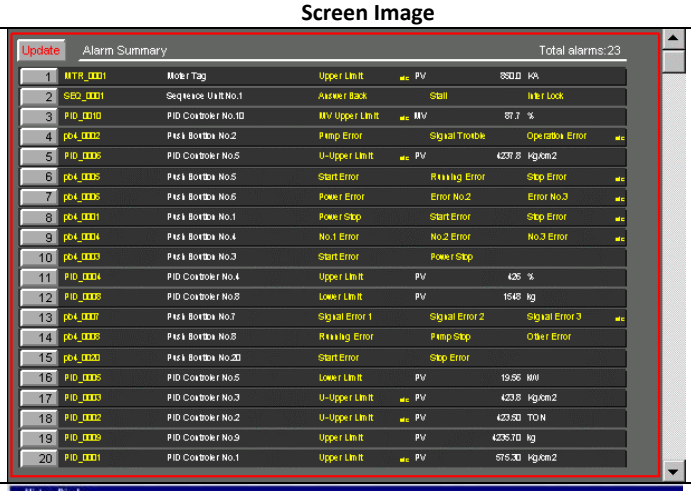	Sorts and displays current alarms.
History Screen	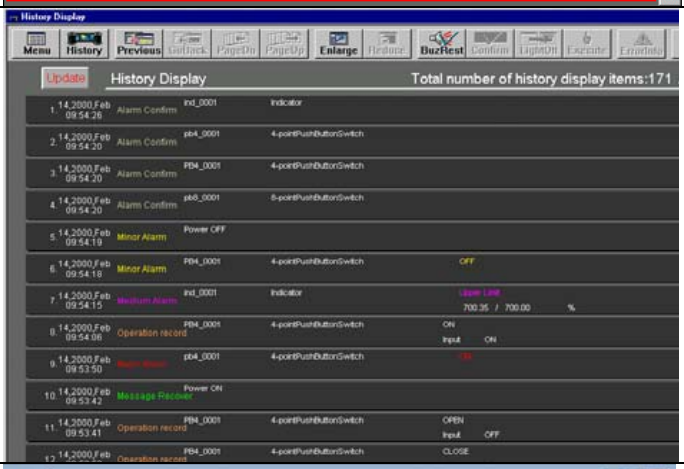	Presents a sorted list of past alarms and operation event records.
Process Graphic Screen	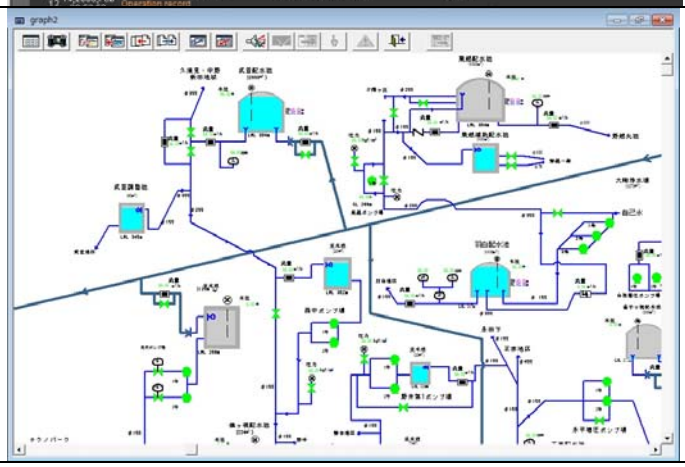	Provides operation in an intuitive way to operate the plant. Made by user configurable drawing from a palette of standard models which can be enhanced with user created models. Tag instrument may be embedded for display and operation.

Fig. 21 OIS-DS Standard Functions (3/4)

Screen Name	Screen Image	Remarks
SOE Screen	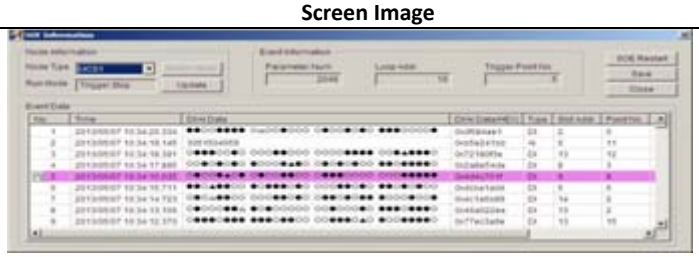	Displays the sequence of events (SOE) message that have been captured on the basis of the plant triggers that are set in advance.

Fig. 22 OIS-DS Standard Functions (4/4)

5.2. OIS-DS Optional Functions

In addition, more advanced features are provided by Optional Packages, as shown below.

Package	Screen Image	Remarks
16-Tag Group Package		Provides a Tag group which can displays up to 16 Tag Instruments.
Real Time Trend Package	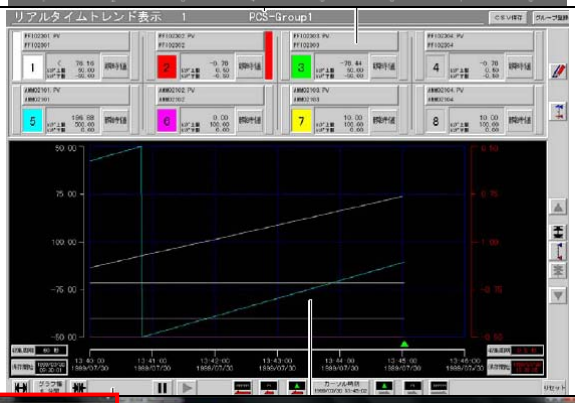	Adds Real Time Trend functionality to the OIS-DS, similar in display to the History Trend Screens but with process data collected in shorter cycles.
OIS Navigation Package	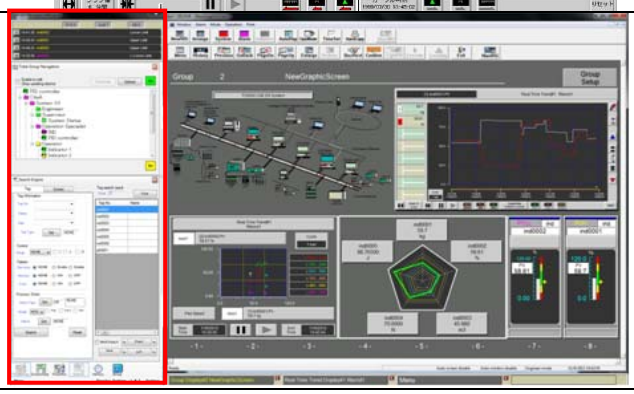	Adds the OIS Navigation function to the OIS-DS offering flexible display of plant information, assisting and simplifying plant operation through the Operator Navigation Window at the side of the main display area. This multifunctional Navigator Window provides various forms of navigation aids including:

Fig. 23 OIS-DS Optional Functions (1/5)

Package	Configuration Image	Remarks
2CRT OIS Package	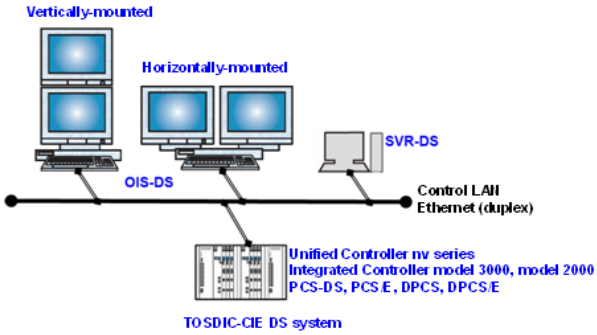	Adds the multi monitor function to display the screen in the suitable size on dual monitors.
Remote OIS Package	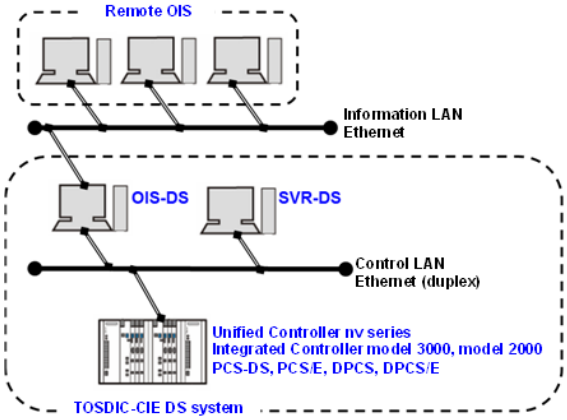	Adds the Remote OIS that monitors process remotely in TOSDIC - CIE DS system via information LAN.

Fig. 24 OIS-DS Optional Functions (2/5)

Package	Screen Image	Remarks
Analog Recorder Support Package	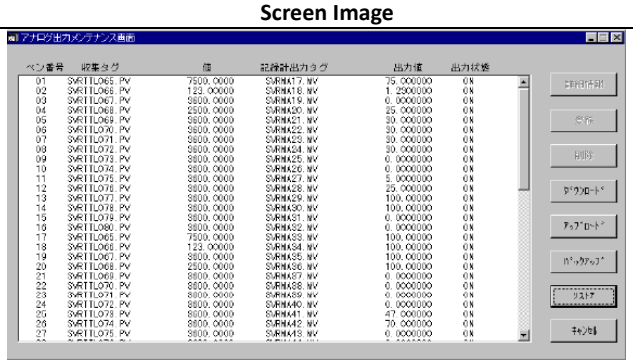	The analog output maintenance screen is added to the OIS-DS. It is used to output the data of the process tag to the analog recorder.
Advanced Hardcopy Package	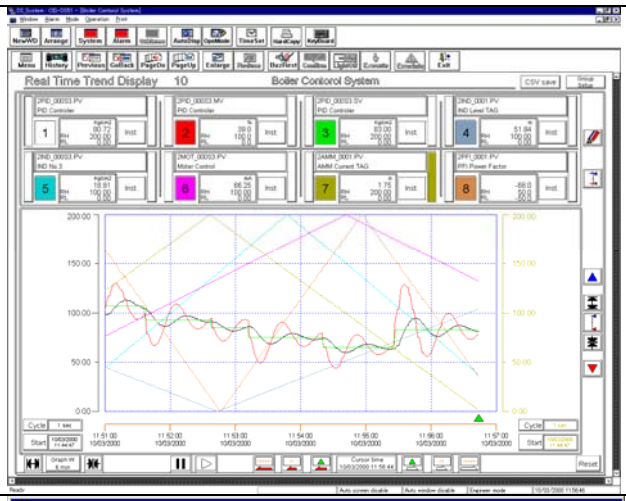	Provides a color conversion function to the hard-copy function of the OIS-DS. The screen is converted as shown in figure 4.2 below.
Historical Data Auto Save Package	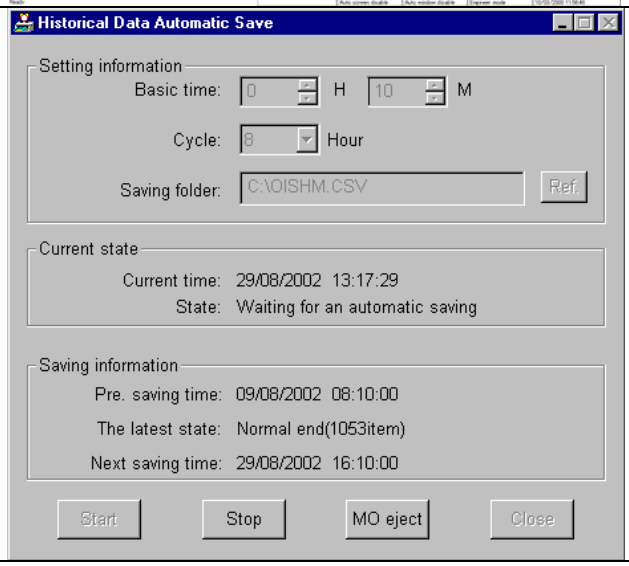	Adds to the OIS-DS the function to preserve history data automatically to archive on a fixed cycle.

Fig. 25 OIS-DS Optional Functions (3/5)

Package	Screen Image	Remarks
OIS-DS Part11 Package		The function conforms to U.S. Food and Drug Administration (FDA) "21 CFR Part 11" rule and enforces password identification of Operators monitoring the OIS-DS , records operator actions and obligates the operator to enter the reason for the action.
DPCS Package	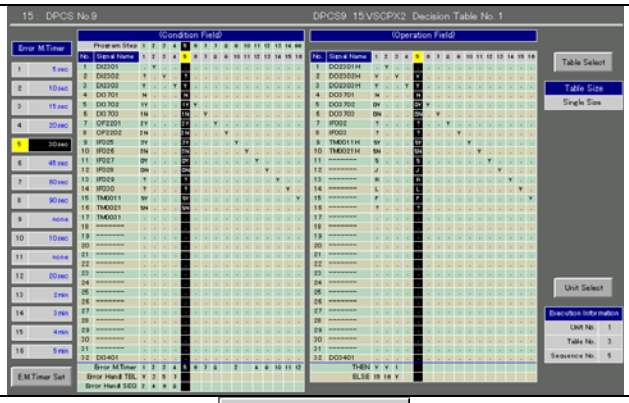	Provides Monitoring and Operation on the OIS-DS of Tags from the DPCS legacy controllers.
2PC Package	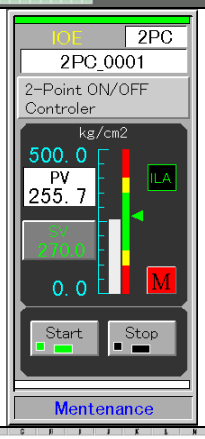	Provides Monitoring and Operation on the OIS-DS of 2PC Tag from the PCS legacy controllers.
Report Package	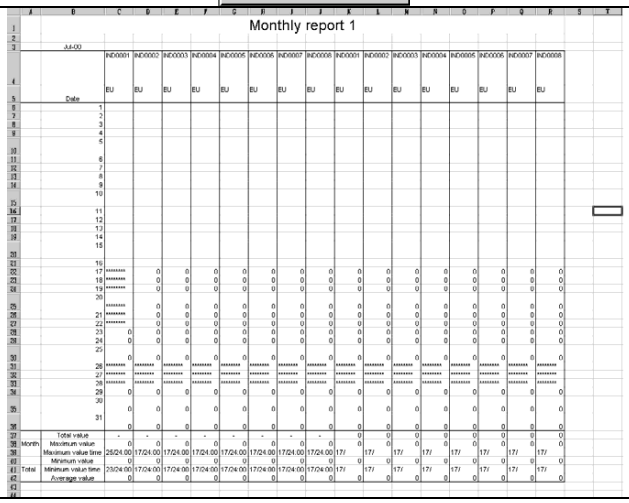	Provides daily, monthly and yearly reports in Microsoft Excel® 2013 format. These reports can be maintained interactively, printed out, and saved in an external storage.

Fig. 26 OIS-DS Optional Functions (4/5)

Package	Screen Image	Remarks
Alarm Management Package	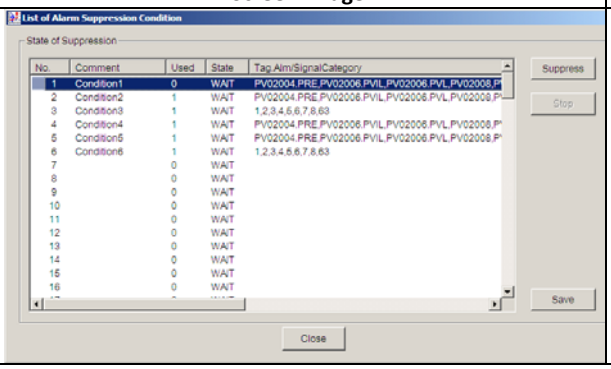	Provides the functionality that analyzes the history data and the functionality function that suppresses alarms automatically.

Fig. 27 OIS-DS Optional Functions (5/5)

5.3. SVR-DS Standard Functions

SVR-DS is a database station which manages the data of a system. SVR-DS takes charge of the common background processing of the system. The standard functions are shown in Fig.25.

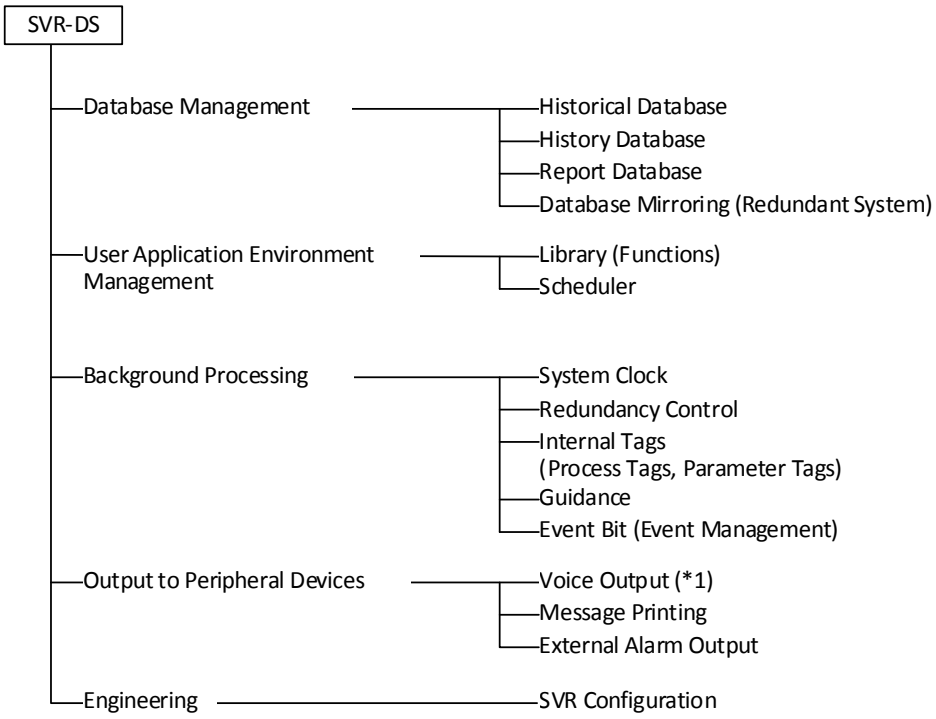

Fig. 28 Standard functions of SVR-DS

If SVR-DS becomes down, the following functions of the OIS-DS are unavailable.

- History Save/Display
- Trend Save/Display
- Guidance Monitor/Display
- Internal Tags (Process Tag, Parameter Tag, and System Tag)
- Report Function
- System Clock Synchronization
- User Applications
- History Message Printing
- External Alarm Output

An effective way to achieve high availability and reliability is to use redundant SVR-DS units.

5.4. EWS function

If you have some OPC Client Applications which accesses tag data of TOSDIC CIE-DS/nv stations, OPC Server (DA2.0/AE1.10) may be applied to them.

5.5. PLCS configuration and function

5.5.1. Stand-alone server configuration

PLCS is an optional controller server to connect PLC with TOSDIC CIE-DS/nv.
The stand-alone server configuration is shown below.

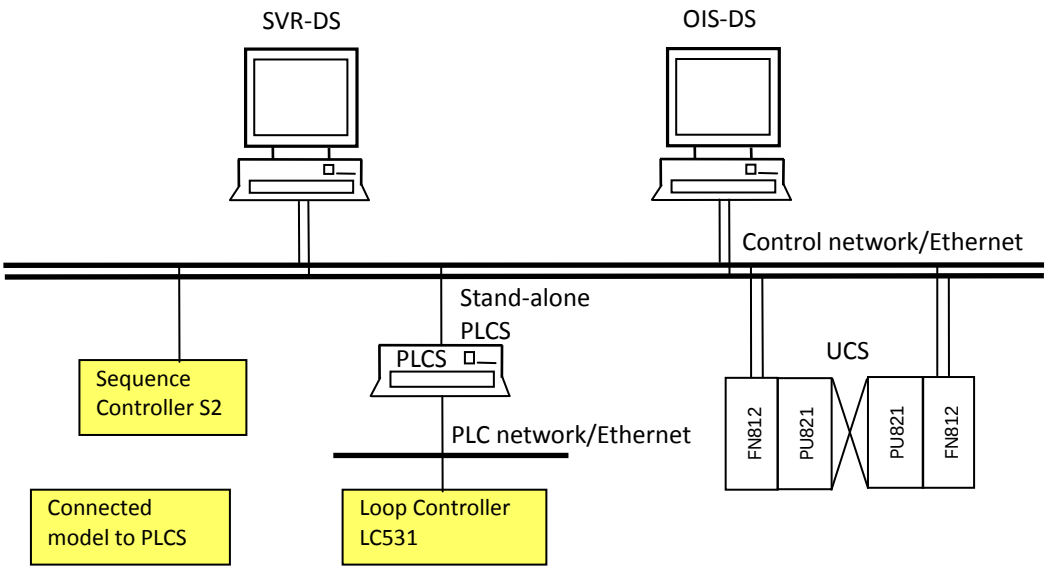

Fig. 29 Stand-alone server configuration

5.5.2. OIS-DS/SMART configuration

OIS-DS/SMART has the function of PLCS.
The OIS-DS/SMART configuration is shown below.

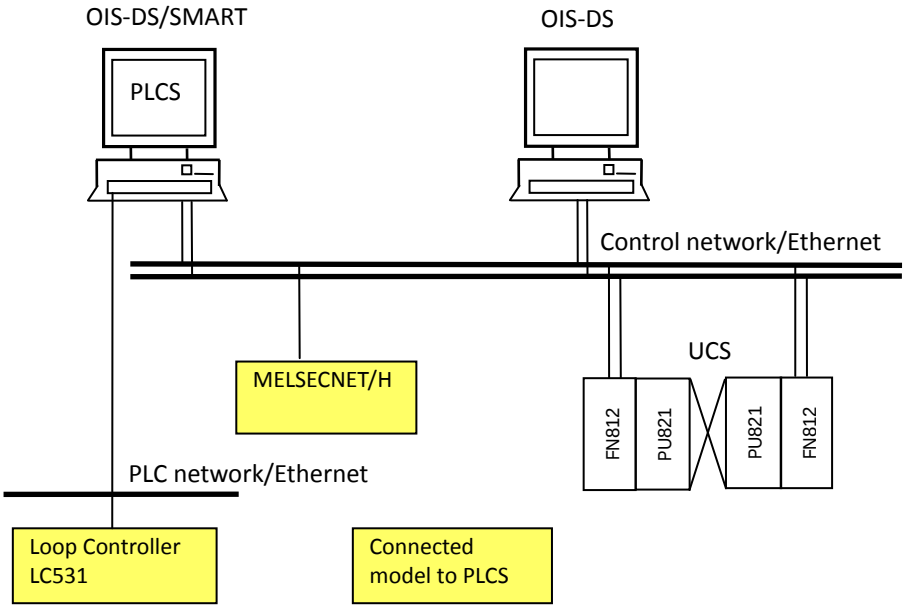

Fig. 30 OIS-DS/SMART configuration

5.5.3. PLCS function

PLCs and One Loop Controllers supported by PLC Server are shown below.

Supplier	Model	PLCS installed in stand-alone server	PLCS in OIS-DS/SMART
TOSHIBA	Loop Controller LC531/LC532	Supported	Supported
TOSHIBA	Loop Controller L1	Supported	Supported
TOSHIBA	Sequence Controller S2		Supported
MITSUBISHI	MELSECNET/H		Supported
< general >	OPC Server DA2.0	Supported	Supported

Table 15 Supported PLCs and One Loop Controllers

	PLCS installed in stand-alone server	PLCS in OIS-DS/SMART
No. model	64	32
No. LC531/LC532	64	32
No. model except for LC531/LC532	16	16

Table 16 Scalability of PLCS

(1) Tag Instrument Server of PLC and Single-Loop Controller

A PLCS can read/write the PLC data via Ethernet and update data of the Tag instruments. These Tag instruments are exposed as ONS interface, so that any OIS-DS can access and display them.

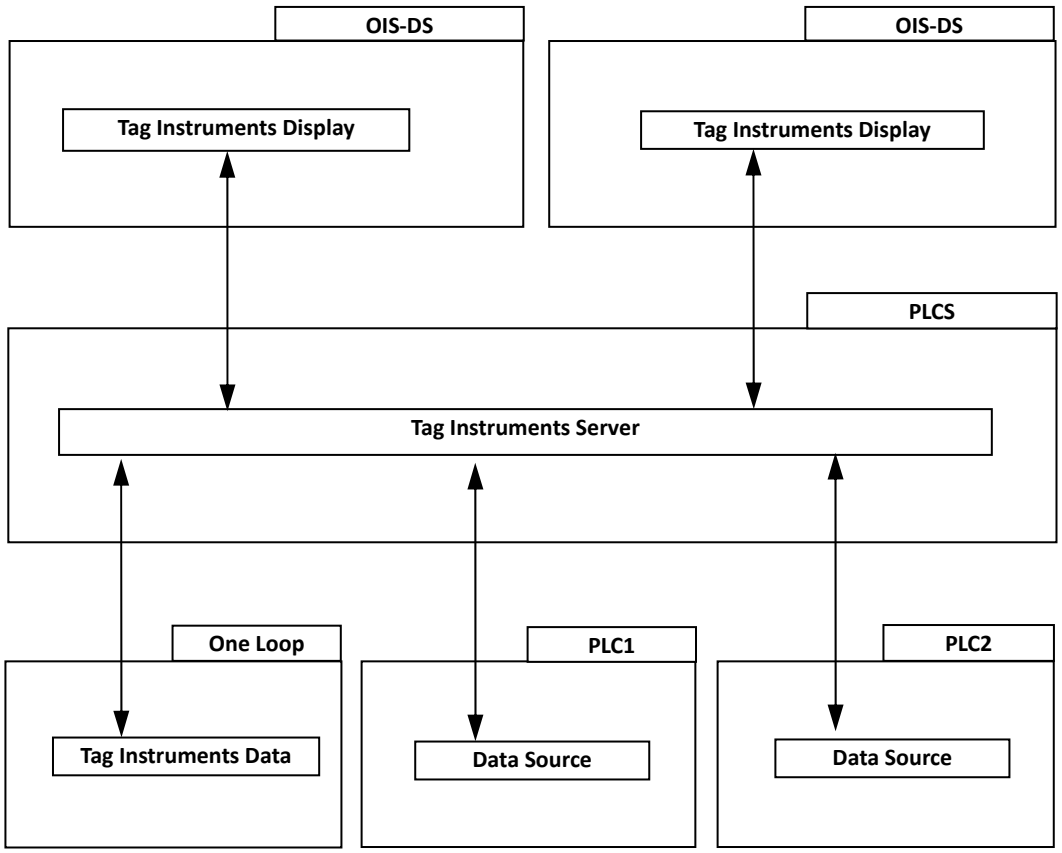

Fig. 31 Tag Instrument Server of PLC and One Loop Controller

(2) Data Communication between One Loop Controllers

Not depending upon PLC Server, data communication between One Loop Controllers like LC531 can be done by using Send Data Register MW and Receive Data Register AW, shown in Fig.25. The connections are defined by nV-Tool.

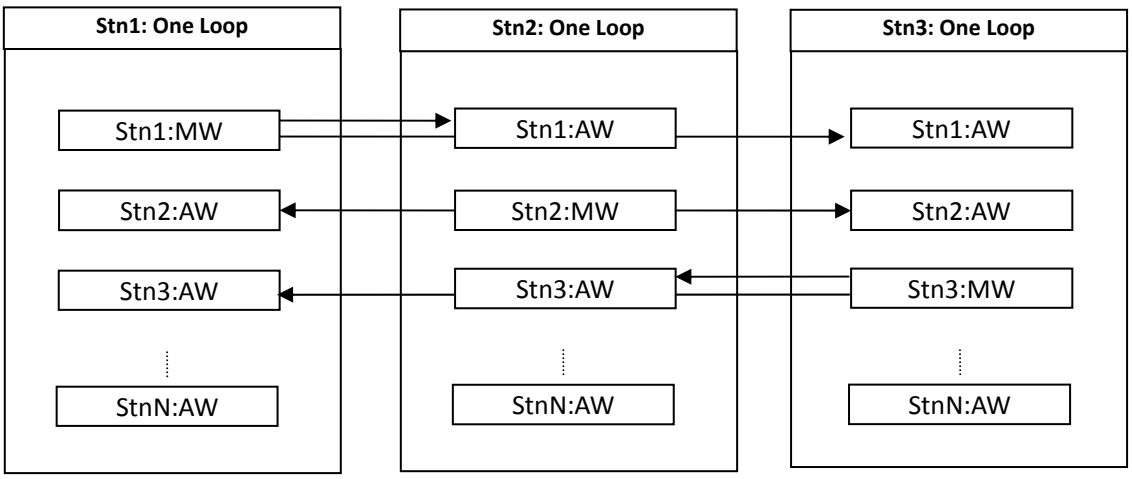

Fig. 32 Data Communication between One Loop Controllers

(3) Data Communication between One Loop Controller and Control Units

Data communication between one loop controller and UCS can also be done using PLCS.

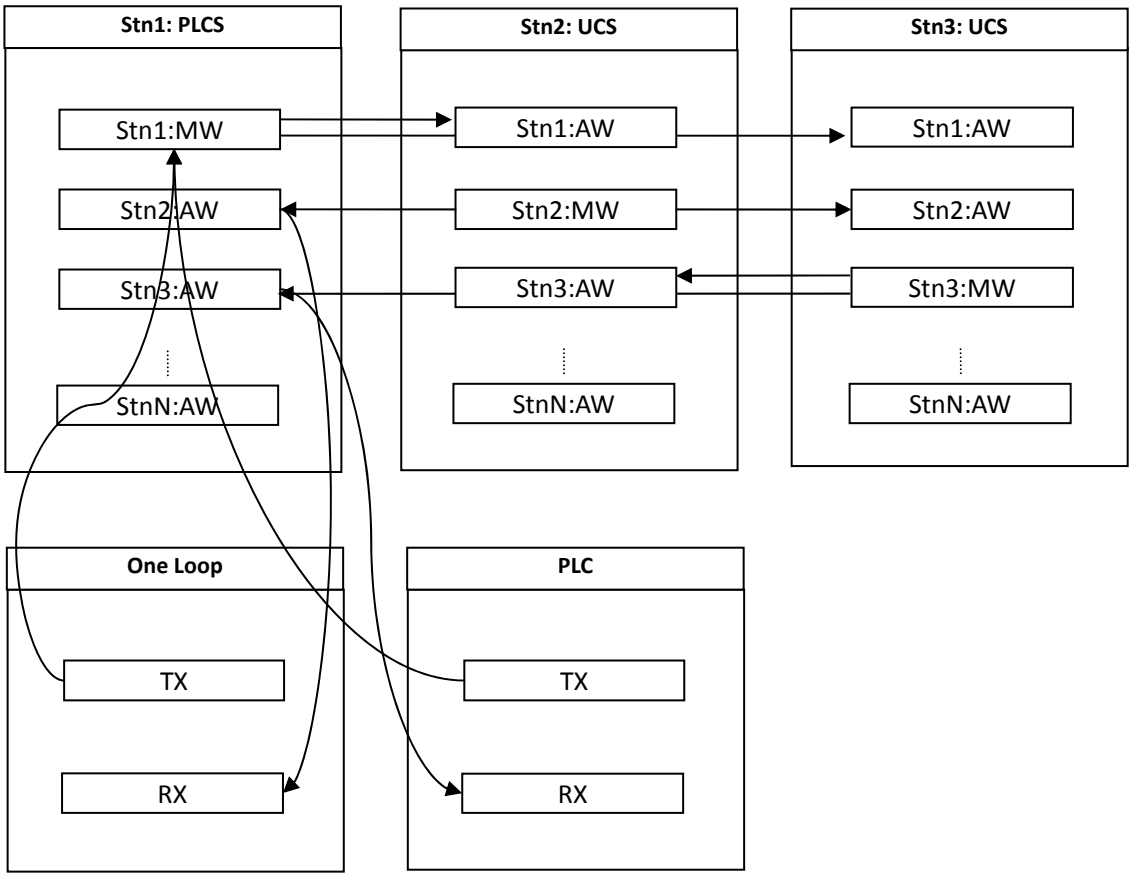

Fig. 33 Data Communication between One Loop Controller and Control Units

6. Control Subsystem

6.1. Hardware General Specification

Item	Specification	Remarks
Operating ambient temperature	0 to 55 deg.C; 40 deg.C or less on average over 24 hours	
Storage temperature	-40 to 70 deg.C	
Operating ambient relative humidity	10 to 90%RH, Level RH2 (no condensation)	
Dust	0.3 mg/m3 (non conductive dust permitted)	
Pollution Level	2 (usually no conductive pollution) or less	IEC61131-2
Corrosive gas	No corrosive gas permitted. No silicone-containing material permitted.	
Operating altitude	2,000 m or less	
Resistance to vibration (vibration immunity)	IEC60068-2-6, test Fc compatible, X, Y, Z 10 cycles each	
Impact resistance (impact immunity)	IEC60068-2-27, test Ea compatible, 147 m/s2 (3 orthogonal axes, 3 times each)	
Insulation resistance	500 VDC Megger, 10 Mohm or more	Between Power and GND terminals
Dielectric strength	2,000 VAC 1min	Between Power and GND terminals
Free fall	Shipping package:1,000 mm For product package 300 mm	
Fast transient	AC power: 2kV DC power: 2kV (section of 10m or less is unnecessary) I/O power DC: 1kV (section of 10m or less is unnecessary) AC-I/O: 2kV (unshielded cable) DC-I/O: 1kV (unshielded cable) Analog I/O: 1kV (shielded cable)	
Electrostatic discharge	4kV (contact discharge) Level ESD-3	
Radiated electromagnetic filed	10 V/m	
Impulse noise	Power wire Noise voltage: 1,500V Pulse width: 1microsec/100 ns	
EMC zone	Zone B (including Zone A)	
Ground	D-class grounding with ground resistance of 100 ohm or less (prescribed by the Japanese Ministerial Ordinance)	
Structure	Open type	
Installation site	In indoor control board	
Cooling system	Standard: Forced air cooling	
Weight	Approx. 16kg BU825 (duplex chassis, full slot installed)	
Outside dimensions	Primary block 431.8(W),482.6(W1) x 265.9(H) x 238(D)	W1 dimensions includes the support bracket
Standard satisfied	IEC61131-2 CE marking, C-tick mark UL508	

Table 17 General Specification of Control Subsystem

6.2. Functional Specification

Item	Specification	Remarks
Event Task (EV)	8 task	
Interrupt Task (IP)	16 task	
High Speed Task (HS)	1 task holds 128 programs. Scan time 10 to 500ms	
Main Speed Task (MS)	1 task holds 512 programs. Scan time 100 to 10000ms	
User Program Capacity	512 kstep	
User Data Capacity	Tag & Parameters: 717KW Local & Global Variables: 256KW IQ Registers: 16KW System Registers: 8KW User Data Registers: 64KW Controller Communication Registers: TX 1KW, RX 64KW	
I/O Capacity	Number of nv-series I/O Units: 32 Number of nv-series I/O Modules per I/O Unit: 16 Number of nv-series I/O Modules per Control Unit :512 (=32*16)	
I/O Speed	Batch I/O : 2 μs/W or less Direct I/O :2 μs/W or less	
Programming Language	LD,FBD, SFC, ST of IEC61131-3	
Duplex Process Speed	Data Tracking Time: 2ms/KW Duplex Switching Time: 500ms or less	

Table 18 Functional Specification of PU821

6.3. Application Capacity and Processing Speed

Tag Instrument	PCS6000	PCS－DS	L3PU	PU821
Indicator (#PV)	768	768	768	1024
Controller (#LP)	256	256	256	320
Pushbutton (#PB)	1024	768	1024	1280
Sequence Unit (#SQ)	128	128	128	128
Timer/ Counter (#TC)	-	128	128	128
Data block (#DB)	-	256	256	256

Table 19 Number of Tag Instruments

Parameter	PCS6000	PCS－DS	L3PU	PU821
Real Parameter (#R)	3072	4096	4096	4096
Integer Parameter (#W)	768	1280	1280	1280
Timer (#T)	512	512	512	512
Counter (#C)	128	128	128	128
Polyline Table (#P)	256	256	256	256
Real Time Trend (#RTT)	-	-	512	512

Table 20 Number of Parameters

Program & Variable	PCS6000	PCS－DS	L3PU	PU821
Programs (kstep)	96	350	512	512
Local Variables (kword)	20	-	128	240
Global Variables (kword)	44	64	16	16
I/O Variables (kword)	8	16	18	16

Table 21 Program & Variable Capacity

Instruction Set	PCS6000 (μs)	PCS－DS (μs)	L3PU (μs)	PU821 (μs)
Contact (1 bit)	0.2	0.14	3.4	0.02
Coil (1 bit)	0.4	0.28	2.5	0.06
Integer Add, Sub (16 bit)	0.4	0.12	0.8	0.02
Integer Div (16 bit)	5.0	1.87	5.0	0.48
Integer Mul (16 bit)	0.8	0.13	5.0	0.06
Real Add,Sub (16 bit)	0.4	0.89	5.0	0.12
Real Dev (16 bit)	6.2	2.22	5.0	0.54
Real Mul (16 bit)	0.6	0.89	5.0	0.12

Table 22 Processing Time of Instruction Set

Fig.30 shows user program consumption of PU821. That depends upon number of Control Loops and Sequence steps user made. The program consumption was estimated assuming that a PID loop consumes 20 steps and a sequence step which contains several conditions and actions requires 65 steps. The result shows the program consumption is primarily depends upon number of sequence steps. 4000 sequence steps consume approximately 250ksteps.

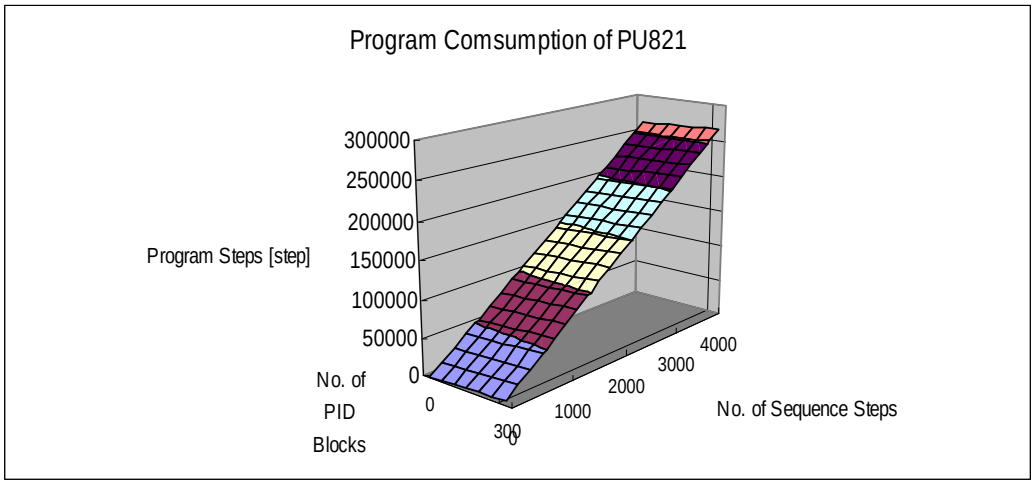

Fig. 34 User Program Consumption of PU821

Fig. 31 shows execution time consumption of PU821. That depends upon number of Control Loops and Sequence steps user made. The time was estimated assuming that a PID loop consumes 0.38 ms and a sequence step which contains several conditions and actions requires 0.004ms. The result shows the time primarily depends upon number of Control Loops. 300 loops only consume about 120 ms.

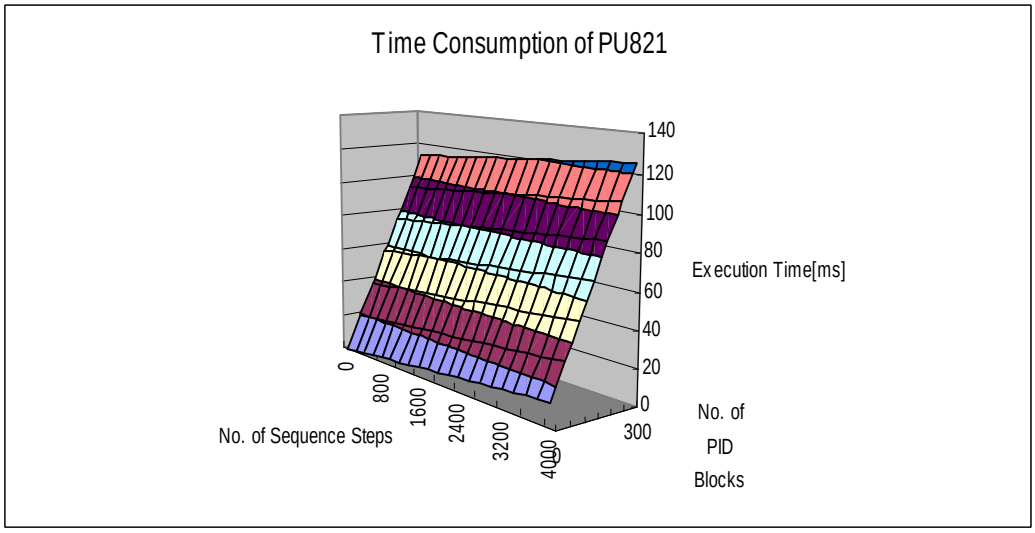

Fig. 35 Execution Time Consumption of PU821

7. Process I/O Subsystem

7.1. Standard Configuration for New System

Fig. 20 shows process I/O standard configuration for new system.

Each Base Unit and TBU (Terminal Block Unit) is mounted on vertical DIN rails.
One (or two for redundant) I/O Adapter SA911/912/961/962/SA9A1 is mounted on a Base Unit BU901.
One I/O Module is mounted on a TBU BU90*.
Up to 16 I/O modules are connectable under the I/O Adapter.
Base Unit and TBUs shall be connected by I/O Bus Cable which total length must be 5 m or less.
Each end should be terminated by I/O Bus Terminator.

Applicable components and I/O Bus Cables for each part are shown in Table 18 and Table 19.

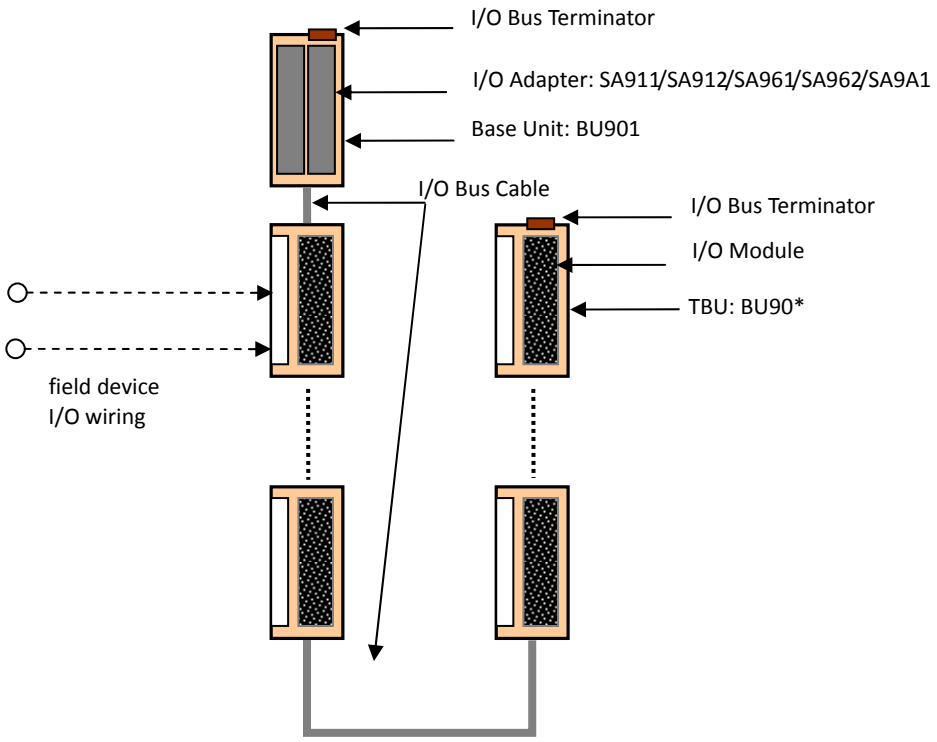

Fig. 36 Process I/O Standard Configuration for New System

Usage	I/O Unit	I/O Adaptor	I/O Module	TBU	Specification
PI/O Unit for DCS	BU901	SA961 /SA962	DI935	BU905	64 Digital Inputs 24Vdc
			DO935	BU905	64 Digital Outputs 24Vdc
			AI969	BU903A	16 Analog Inputs 1-5Vdc
			RT918	BU902A	8 RTD Inputs (channel isolation)
			TC919	BU904A	16 THC Inputs + 1CJC
			AI9A9B	BU903A	16 Analog Inputs 4-20mA *duplex disable
			AI9H9B	BU903A	16 Analog Inputs 4-20mA with HART *duplex disable
			AO9A9B	BU902A	16 Analog Outputs 4-20mA *duplex disable
			AO9H9B	BU902A	16 Analog Outputs 4-20mA with HART *duplex disable
			PI948	BU902A	8 Pulse Inputs
			PO919	BU902A	16 Pulse Outputs
			IS911	BU901	Serial Communication to SYSMAC/MELSEC
PI/O Unit for General	BU901	SA911 /SA912	DI934	BU902A	32 Digital Inputs 24Vdc
			DI934S	BU902A	32 Digital Inputs + 2 Strobes 24Vdc
			DI935	BU905	64 Digital Inputs 24Vdc
			DI936	BU902A	16 Digital Inputs 24Vdc
			DI937	BU902A	16 Digital Inputs 24Vdc
			DI944	BU902A	32 Digital Inputs 48Vdc
			IN956	BU906A	16 Digital Inputs 100/120Vac, 100/120Vdc
			IN966	BU906A	16 Digital Inputs 200/240Vac
			DO934	BU902A	32 Digital Output 24Vdc
			DO935	BU905	64 Digital Output 24Vdc
			DO936	BU906A	16 Digital Output 24Vdc, 2A
			AC963	BU906A	16 Digital Outputs 100/240Vac, 2A
			RO966	BU906A	16 Digital Outputs 24Vdc/240Vac, 2A
			AI914	BU903A	4 Analog Inputs 0-5Vdc
			AI918	BU903A	8 Analog Inputs 0-5Vdc
			AI918D	BU902A	8 Analog Inputs 0-20mA with Distributor
			AI918F	BU903A	8 Analog Inputs 0-5Vdc
			AI919	BU903A	16 Analog Inputs 0-5Vdc
			AI928	BU903A	8 Analog Inputs 0-20mA
			AI929D	BU902A	16 Analog Inputs 4-20mA with Distributor
			RT918	BU902A	8 RTD Inputs (channel isolation)
			RT918C	BU902A	8 RTD Inputs (no channel isolation)
			TC919	BU902A	16 THC Inputs + 1CJC
			AO928	BU902A	8 Analog Outputs 0-20mA
			AO928F	BU902A	8 Analog Outputs 0-20mA
			AO929	BU902A	16 Analog Outputs 0-20mA
			PI918	BU902A	8 Pulse Inputs, 12-24Vdc
			PI924	BU902A	4 Bi-Pulse Inputs, 12-24Vdc
			MD911	BU901	Modbus Serial RS485
			FL911	BU901	FL-net 10/100BASE-T
			EN911	BU901	Ethernet 10/100BASE-T
			IS911	BU901	Serial Communication to SYSMAC/MELSEC
PI/O Unit for SOE	BU901	SA9A1	DI936	BU902A	16 Digital Inputs 24Vdc
			DI934	BU902A	32 Digital Inputs 24Vdc
			DI944	BU902A	32 Digital Inputs 48Vdc
			AI919	BU903A	16 Analog Inputs 0-5Vdc

Table 23 Process I/O Standard Components for New System

I/O Bus Cable	Specification
TR901	Terminator (2 attached BU901)
CN9C3	3cm (1 attached BU902/3/4/5/6)
CN9C9	9cm
CN9R5	0.5 m
CN910S	1.0 m
CN920S	2.0 m
CN940S	4.0 m

Table 24 I/O Bus Cables

7.2. Integrated SOE (Sequence Of Events) Option

TOSDIC™-CIE DS/nv can provide Integrated SOE option. The key components are shown below.

1) **TS811** : Time Service Module which provides GPS time information to PU821.
2) **SA9A1** : SOE I/O Adapter which detects each digital input change to make events with 1ms resolution time stamp.

Only one SA9A1 can be installed per TC-net I/O Loop. Available digital input modules and analog input modules for SA9A1 are shown in Table.18.

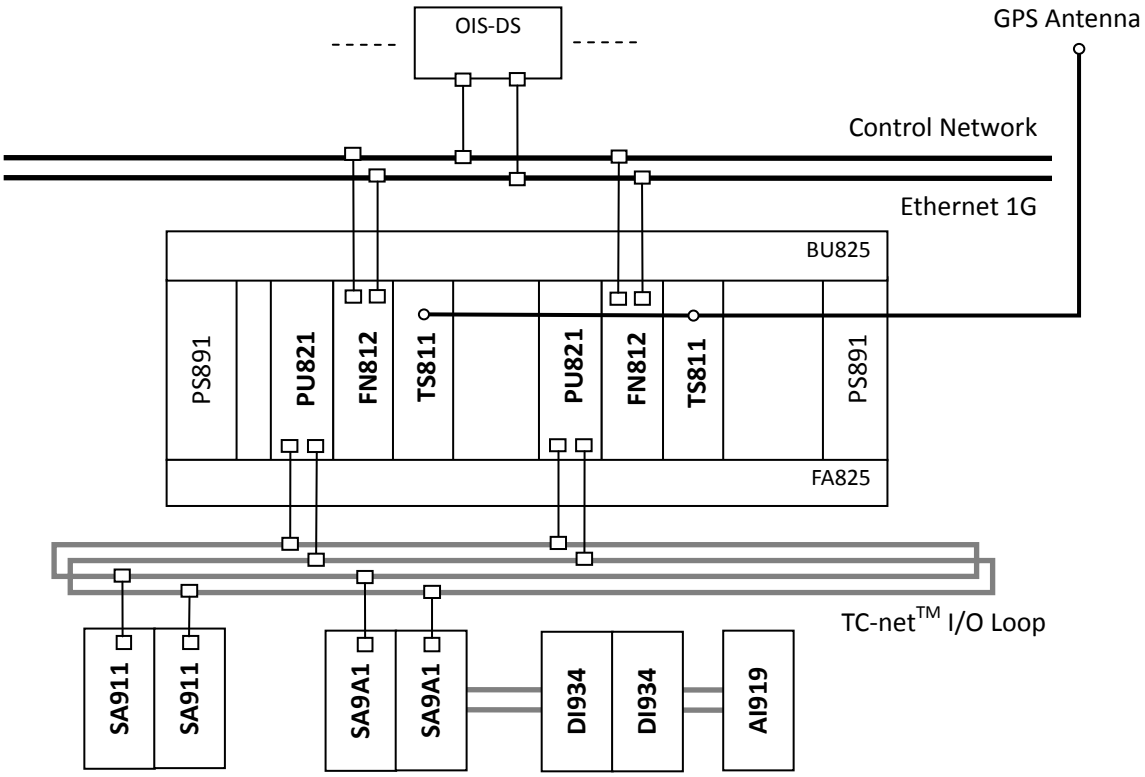

Fig. 37 Integrated SOE System

7.3. Migration from DPCS

To realize cost effective migration from legacy DPCS to nv-series, suitable components are supplied sown in Table 9. Basically existing terminal block unit are kept remained and the I/O Units are replaced.
Please refer to **"DPCS Migration Book"** to know more detail.

Usage	I/O Unit	I/O Adaptor	I/O Module	TBU	Specification
DPCS Migration	BU928F	SA931	LP918B	Existing	12 Analog Inputs 1-5Vdc 8 Analog Output 4-20mA 8 Digital Inputs 24Vdc 8 Digital Outputs 24vdc *duplex enable
	BU929F	SA911 /SA912	DI934I	Existing	32 Digital Inputs 24Vdc
			DO934	Existing	32 Digital Outputs 24Vdc
			AI969	Existing	16 Analog Inputs -5～+5Vdc
			RT918	Existing	8 RTD Inputs (channel isolation)
			TC919	Existing	16 THC Inputs + 1CJC
			AO928	Existing	8 Analog Outputs 0-20mA
			PI948	Existing	8 Pulse Inputs 2～30Vp-p

Table 25 Process I/O Migration Components from DPCS

7.4. Migration from PCS

To realize cost effective migration from legacy PCS to nv-series, suitable components are supplied sown in Table 10. Basically existing terminal block unit are kept remained and the I/O Units are replaced.
Please refer to **"PCS Migration Book"** to know more detail.

Usage	I/O Unit	I/O Adaptor	I/O Module	TBU	Specification
PCS Migration	BU927F	SA961 /SA962	DI935	Existing	64 Digital Inputs 24Vdc
			DO935	Existing	64 Digital Outputs 24Vdc
			AI969	Existing	16 Analog Inputs 1-5Vdc
			RT918	Existing	8 RTD Inputs (channel isolation)
			TC919	Existing	16 THC Inputs + 1CJC
			AI9A9B	Existing	16 Analog Inputs 4-20mA *duplex enable
			AI9H9B	Existing	16 Analog Inputs 4-20mA with HART *duplex enable
			AO9A9B	Existing	16 Analog Outputs 4-20mA *duplex enable
			AO9H9B	Existing	16 Analog Outputs 4-20mA with HART *duplex enable
			PI948	Existing	8 Pulse Inputs
			PO919	Existing	16 Pulse Outputs

Table 26 Process I/O Migration Components from PCS

7.5. Migration form MCS, PCS-DS

To realize cost effective migration from legacy MCS or PCS-DS to nv-series, the existing Intelligent Serial I/O is kept remained and can be connected to nv-series Control Unit via SB812, shown in Fig. 9.

8. Field Network Subsystem

8.1. Modbus-TCP Client

The hardware configuration is shown in <3.5.1 EN811:Modbus-TCP Client>. Any user's Program of PU821 can read/write data of the third party Modbus-TCP servers by using Modbus-TCP Client Function Block. The Function Block is provided by nV-Tool4.

8.2. Modbus Serial

An example of the Modbus Serial Interface system using MD911 is shown below.
Base Unit: BU901 can hold up to two independent MD911.
I/O Adapter: SA911 or SA912 can connect up to 16 I/O modules including MD911.
The Modbus system may be configured using RS485 2wire or 4wire interface.

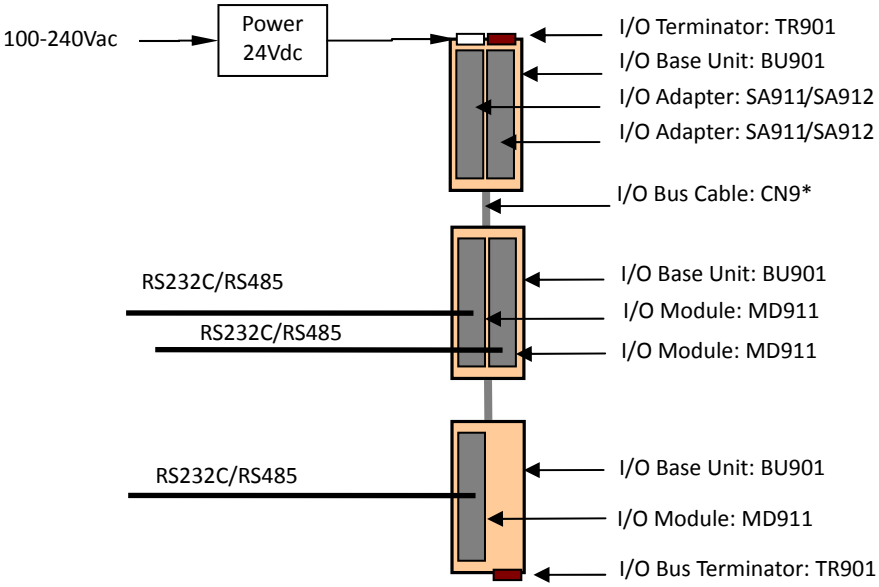

Fig. 38 Example of Modbus Serial Interface System using MD911

8.3. FL-net

An example of FL-net Interface system using FL911 is shown below.
Base Unit: BU901 can hold up to two independent FL911.
I/O Adapter: SA911 or SA912 can connect up to 16 I/O modules including FL911.
The FL-net system may be configured using switching hubs which have 100BASE-TX interface.

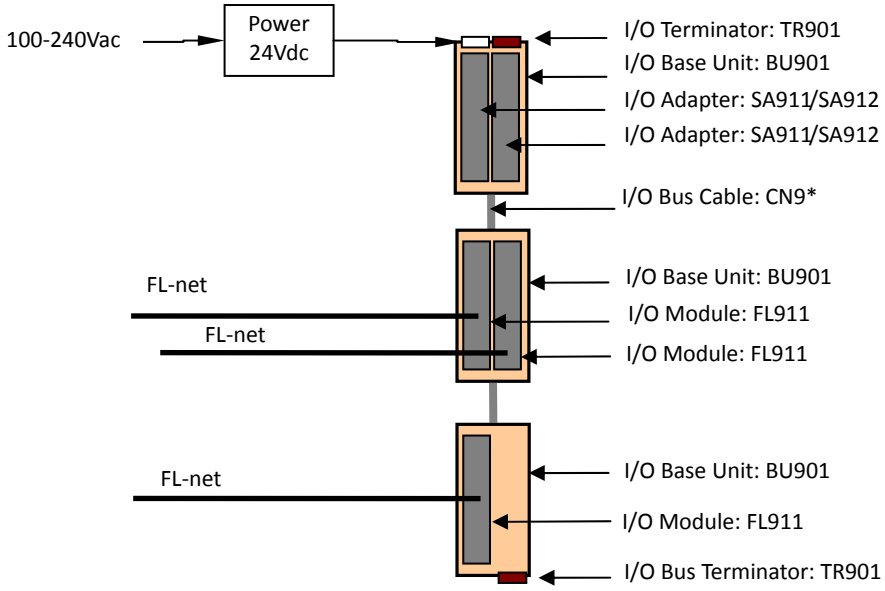

Fig. 39 Example of FL-net Interface System using FL911

8.4. Serial Communication to PLC

An example of the PLC Serial Interface system using IS911 is shown below.
Base Unit: BU901 can hold up to two independent IS911.
I/O Adapter: SA961 or SA962 can connect up to 16 I/O modules including IS911.
The PLC Serial Interface system may be configured using RS485/RS232C interface.
At this moment the supported PLC are **CS1W-SCB41-V1/C500-LK201 of SYSMAC** and **AJ71UC24 of MELSEC**.
We are ready to support the other serial devices to be connected if you need.

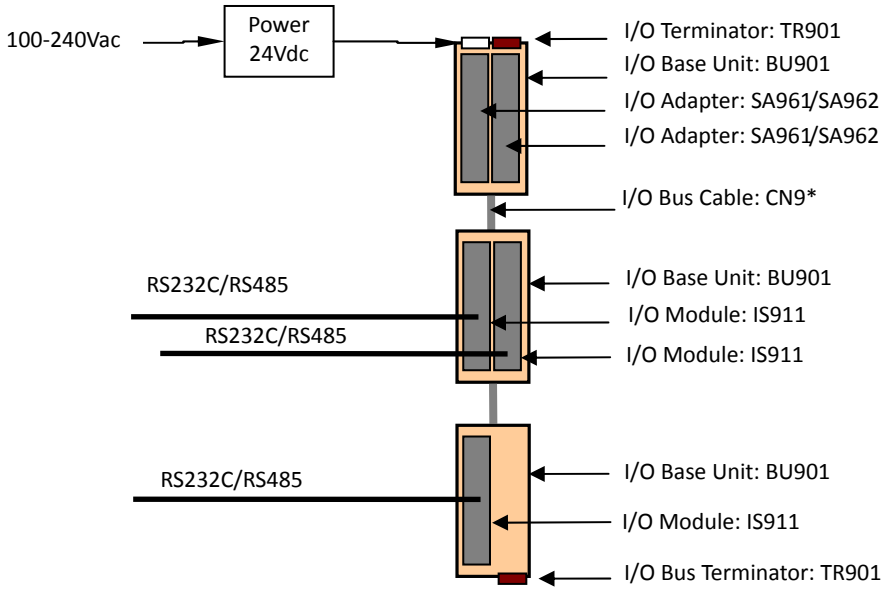

Fig. 40 Example of PLC Serial Interface System using IS911

8.5. HART Device Connection

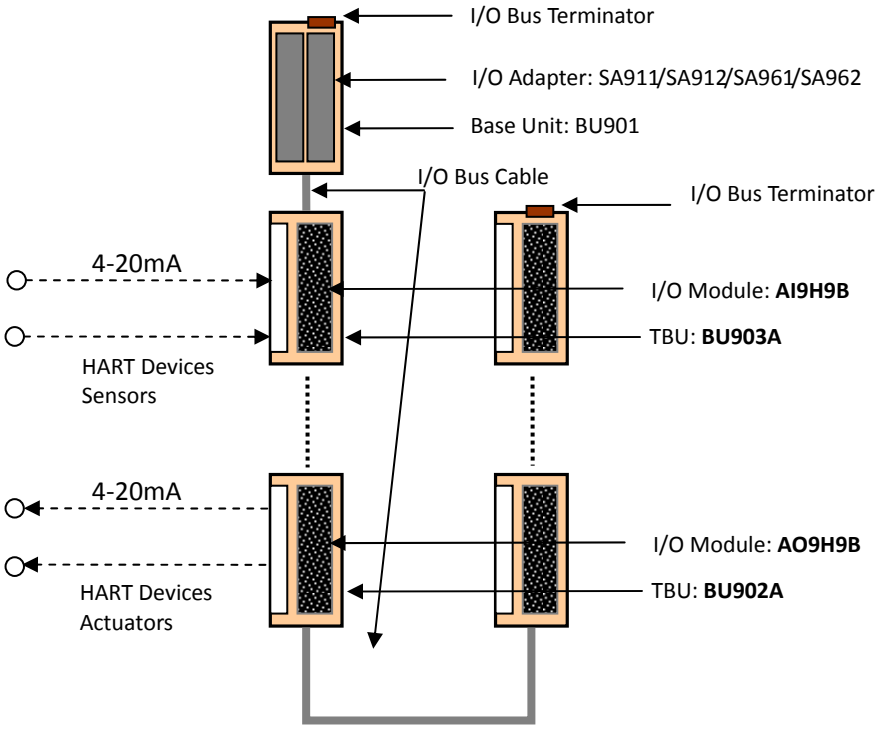

Fig. 41 Example of HART Interface using AI9H9B and AO9H9B

9. Engineering Subsystem

9.1. Control Engineering Functions

nV-Tool is a control engineering tool which helps control engineers build Control Subsystem and I/O Subsystem.
It supports the system totally from system build, including hardware configuration registration, application program development and debugging, to system maintenance such as on-line status display and RAS information collection.
Various types of option packages are available to improve the programming efficiency, quality and to provide ease of maintenance of the system.

9.1.1. System Requirements of nV-Tool

nV-Tool needs the following hardware and software.

Item	System Requirements	
	Standalone version, Client-server version (Client)	**Client-server version (Server)**
Hardware type	- PC/AT compatible machine	
Processor	Intel® Pentium®III 1.0GHz or greater (In case of Windows® XP) Intel® Core™2 1.0GHz or greater (In case of Windows Vista®,Windows® 7)	-Intel® Pentium® 4 1.7GHz or greater (In case of Windows® XP) -Intel® Core™2 2.0GHz or greater (In case of Windows Vista®,Windows® 7) - Intel® Xeon® 3.0GHz or greater, or Intel® Core™2 2.0GHz or greater (In case of Windows Server™ 2003 R2, or Windows Server™ 2008)
Memory capacity	- 384MB or more (In case of Windows® XP) -1GB or more (In case of Windows Vista®,Windows® 7)	- 512MB or more (In case of Windows® XP) - 1GB or more (In case of Windows Vista®, Windows® 7, Windows Server™ 2003 R2, Windows Server™ 2008)
Hard disk capacity	- Free space of 500MB or more is required in the partition where the nV-Tool is set up.	
Display	- Video display adaptor that can use resolution of 1024*768 pixels and 256 colors	
Disk device	- CD-ROM drive (required only during setup)	
Peripheral device	- Keyboard - Mouse - Ethernet network adaptor	
OS	- Windows® XP Professional (SP3) - Windows Vista® Business (SP2) - Windows Vista® Ultimate (SP2) Windows® 7 Professional - Windows® 7 Ultimate	-Windows® XP Professional (SP3)Windows Vista® Business (SP2) - Windows Vista® Ultimate (SP2) Windows® 7 Professional -Windows® 7 Ultimate - Windows Server™ 2003 R2 Enterprise Edition (SP2) - Windows Server™ 2008 Enterprise Edition (SP2)
Other software	- Microsoft® Internet Explorer® (required only for the online manual)	

Table 27 System Requirements of nV-Tool

9.1.2. Engineering Flow of nV-Tool

Fig.37 shows engineering flow using nV-Tool.

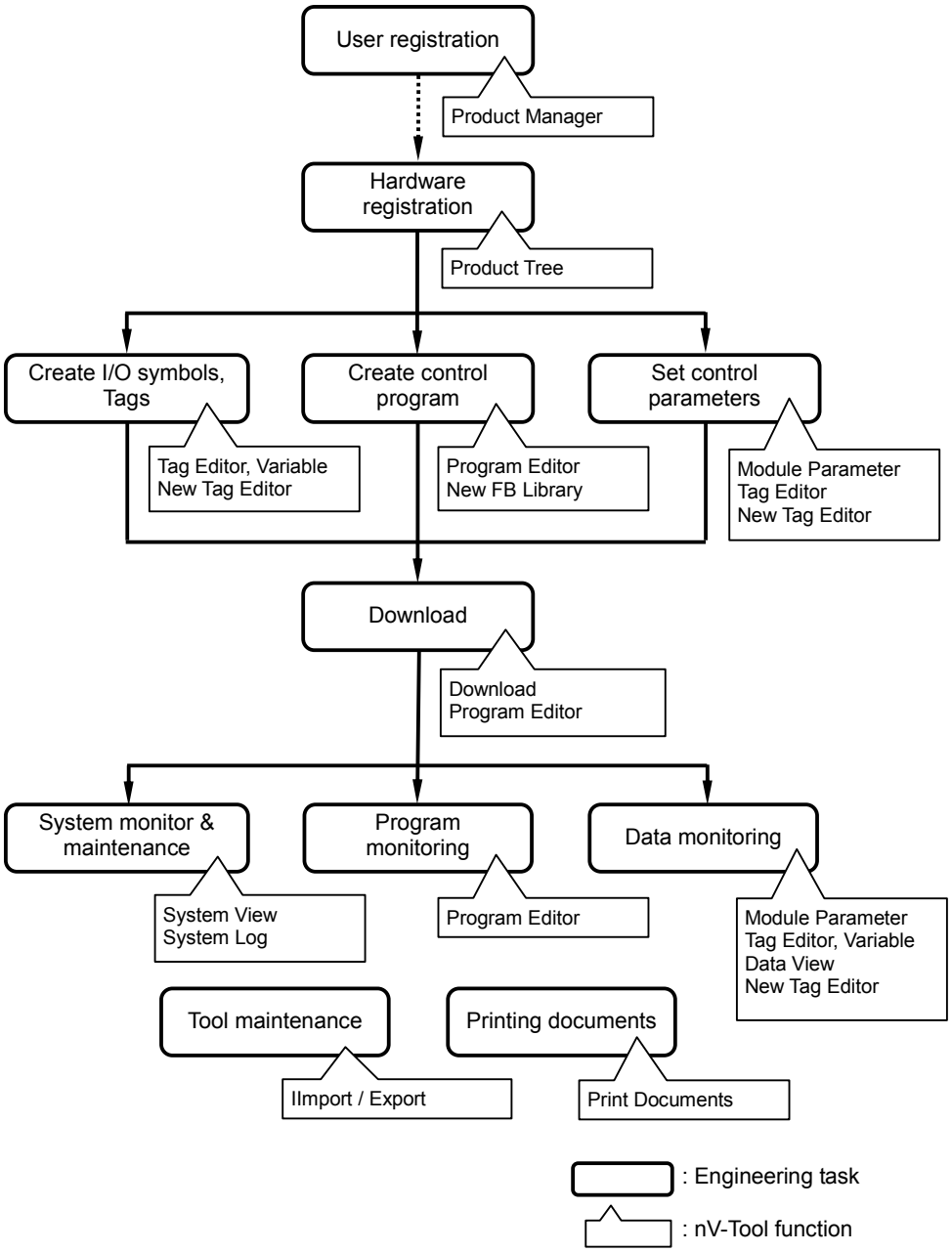

Fig. 42 Engineering Flow using nV-Tool

9.1.3. Standard Functions of nV-Tool

(1) Product Manager

A system administrator of nV-Tool may register the users and passwords. Only the registered users can log in to the tool.

(2) Product Tree

A system, stations and controllers of TOSDIC™ CIE-DS/nv system are registered.
At system level the networks and the stations are registered.
At station level the controllers are registered.
At controller level the I/O modules are registered.

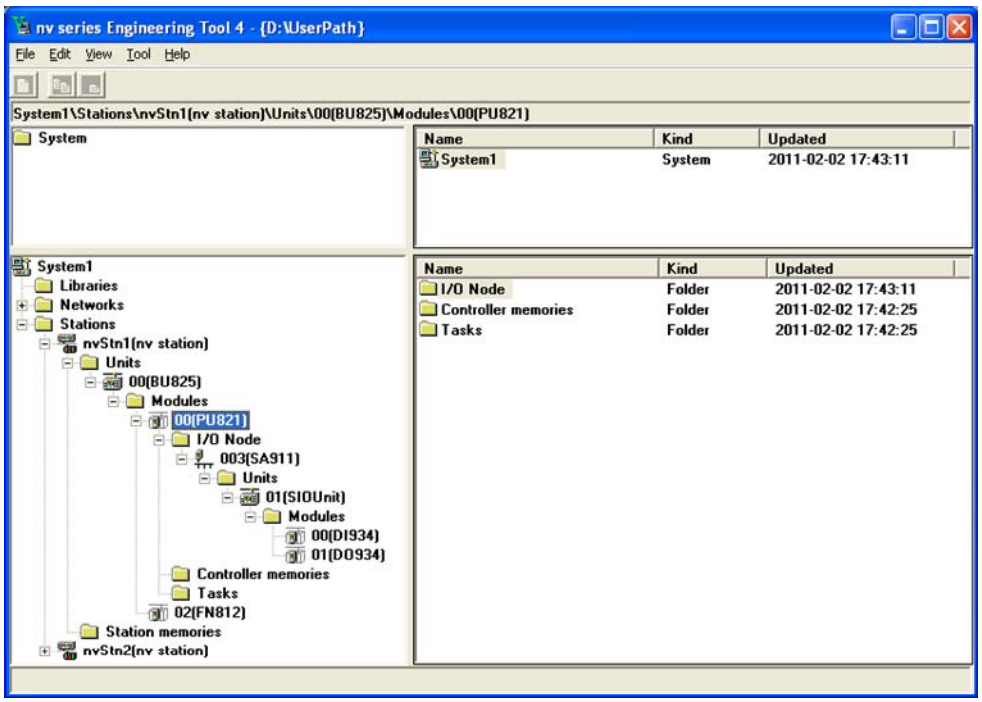

Fig. 43 Product Tree

(3) Module Parameters

Parameter values of various modules such as controller, network interface and process I/O are set and monitored on-line.

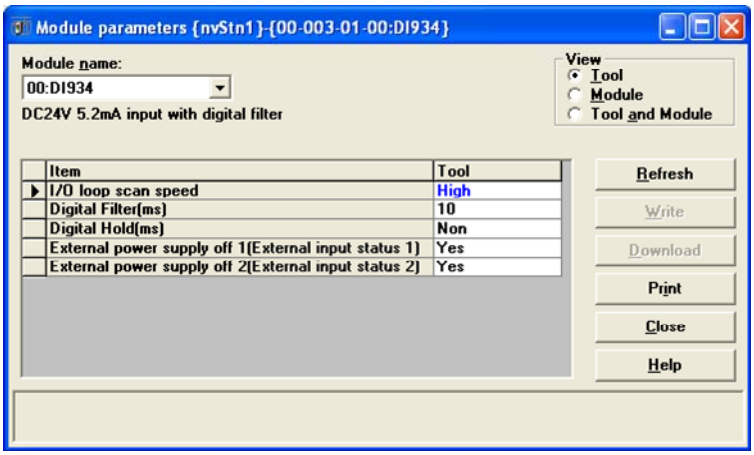

Fig. 44 Module Parameters

(4) I/O Variables

Register symbol names for each process or communication I/O to online-monitor the value using I/O Variables window. Each symbol name can be used as a variable by any control application program.

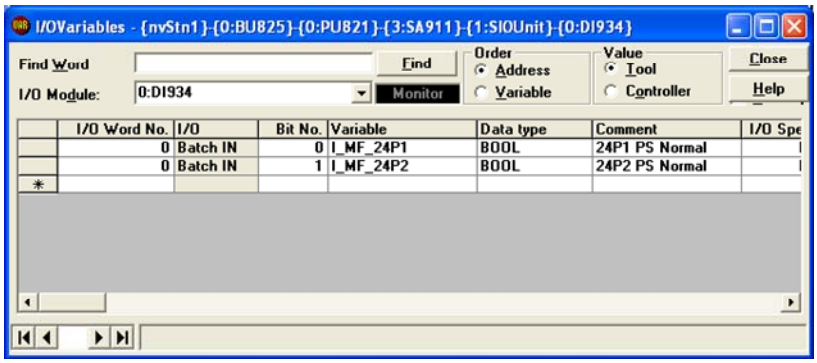

Fig. 45 I/O Variables

(5) Tag Editor

Each tag Instrument which contains a Tag No. and parameters can be registered. Each value of tag instrument can be set and monitored on-line. Tag No. can be used as a variable in any control application program.
Using the New Instrument Tag Editor option package, the registration work is more efficiently in a spread sheet manner.

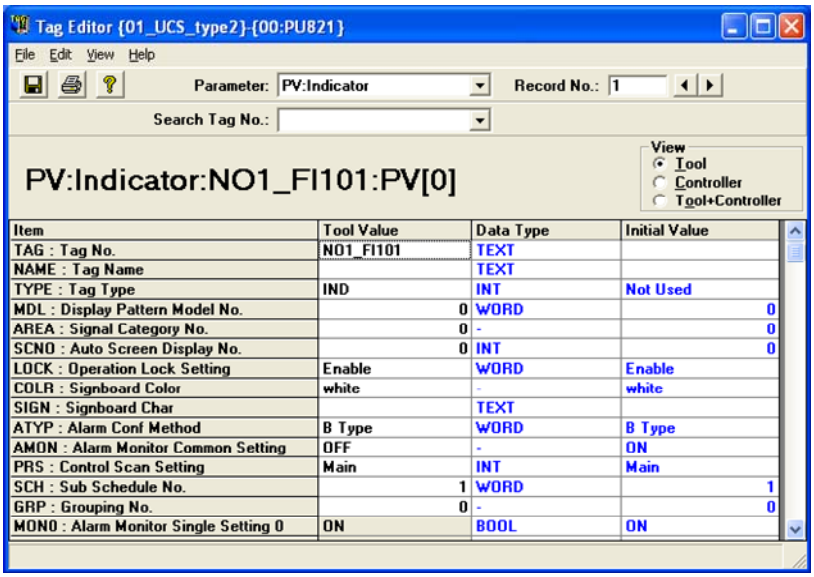

Fig. 46 Tag Editor

(6) Program Editor

Control application programs based on IEC 61131-3 can be created, edited, downloaded and monitored. Graphic symbols of LD, FBD and SFC can be drawn together in a program, a function and a function block.
Not only IEC61131-3 based programs but also CLD (Control Loop Diagrams) and IBD (Internal Block Diagrams) can be drawn using Custom Symbol Editor.
A control application program of the Program Editor can be downloaded on-line and monitored instantly.
Power flow of LD, signal flow and data of FBD and active steps of SFC are dynamically updated.

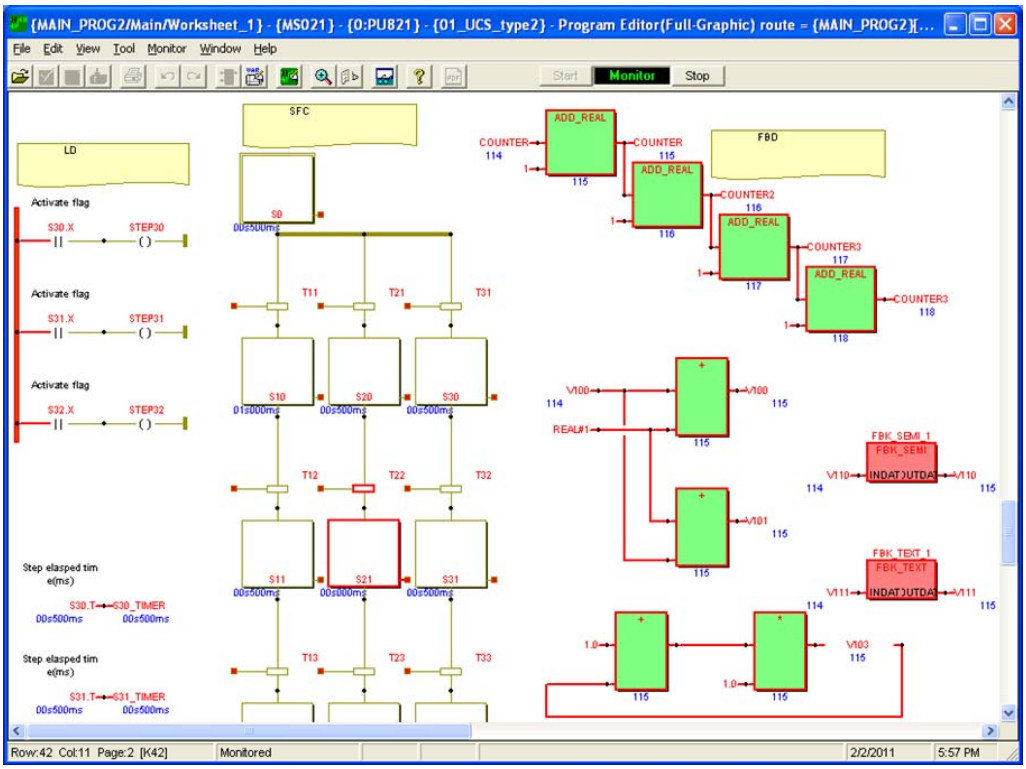

Fig. 47 Program Editor (Example of mixture of LD/FBD/SFC)

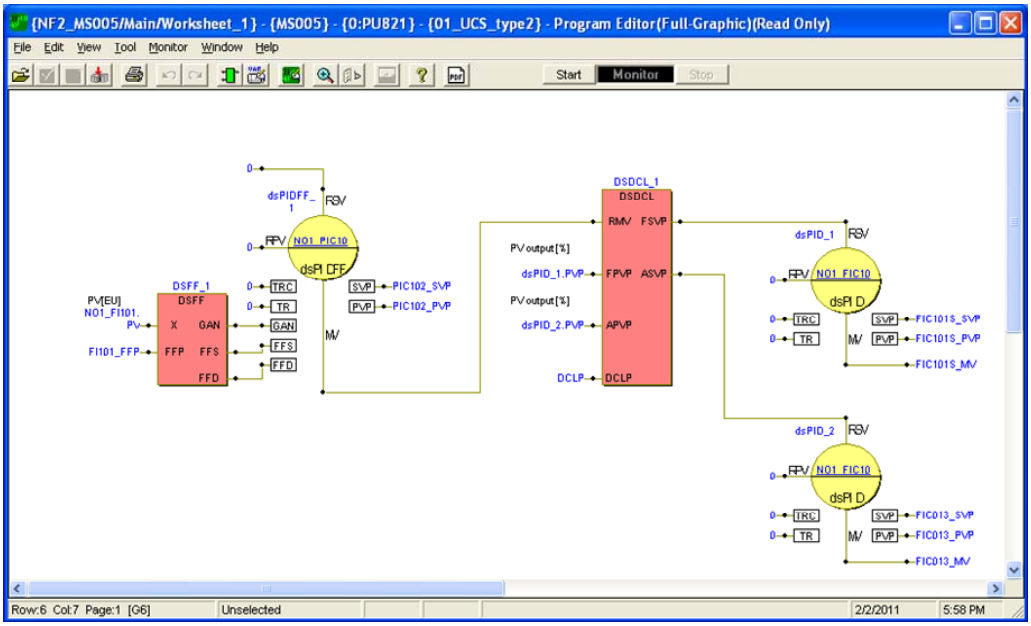

Fig. 48 Program Editor (Example using Custom Symbol)

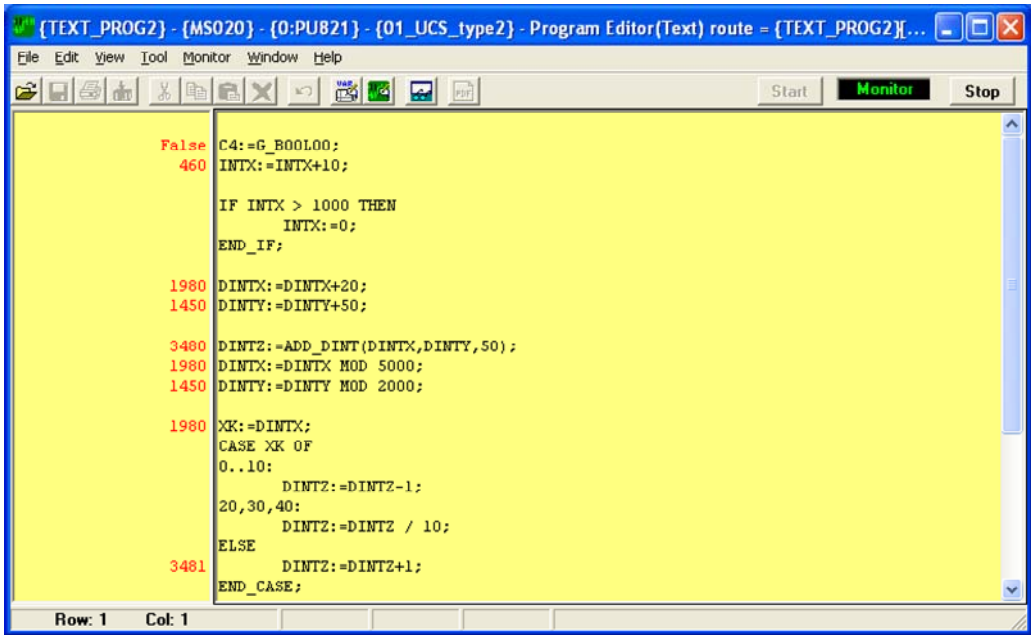

Fig. 49 Program Editor (Example of ST)

Sequence control program by Decision Table used in legacy DPCS is also available.

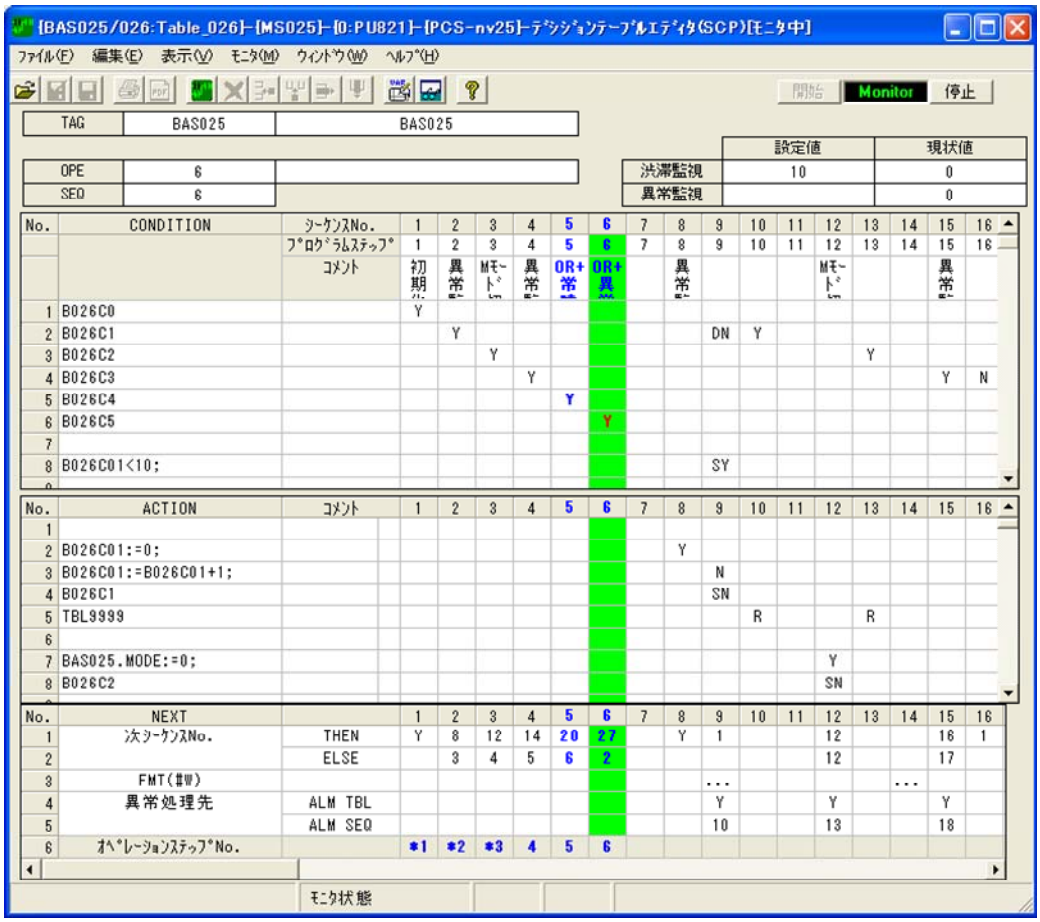

Fig. 50 Decision Table Editor

(7) Download

A batch of controller data which consists of controller configuration, global variable settings and application programs can be downloaded when the status of target controller is HALT.
Using Program Editor, a program can be downloaded when the status of target controller is RUN.

(8) System View

Monitoring networks/stations/controllers/IO units, switching RUN/HALT, and backup/restore/clear of controller can be performed.

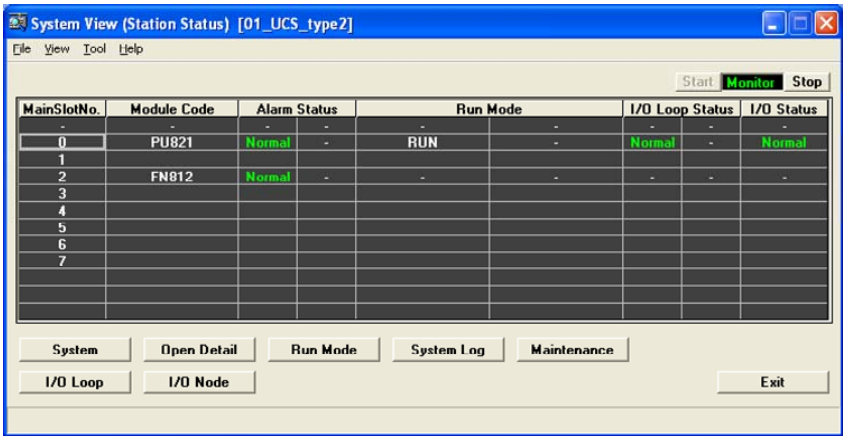

Fig. 51 System View

(9) System Log

Error, Event, Operation and Communication logs are detected and stored in each controller.
System Log can display all of the logs and save as a text file.

Fig. 52 System Log

(10) Data View
Any registered variables can be preset, monitored and value-changed on-line.

(11) Import / Export

A user system file of engineering data and programs can be imported or exported.
A program, function block and function file also can be exchanged.

(12) Print Documents
Hardware configurations, programs and parameters of user system can be printed as documents.
These can be stored directly as a PDF file.

9.1.4. New Instrument Tag Editor

This is a spreadsheet style editor to register and assign tag instruments used in any instrument control applications. Displaying tag instruments, monitoring data and setting parameters are also available in online mode.
The New Instrument Tag Editor has the following features:
- Registering Tags even if controller configuration is not determined.
- Easy to assign I/O points to Tags.
- Available to add and delete tags online.

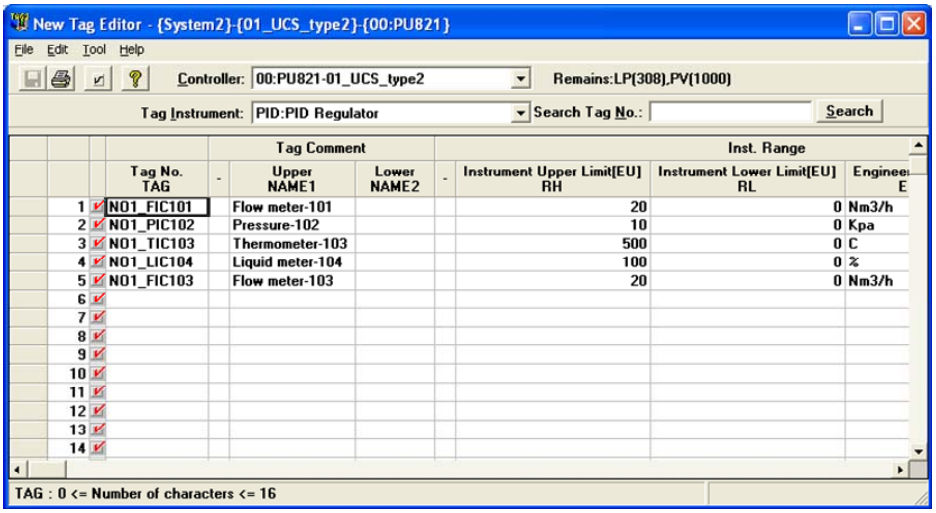

Fig. 53 New Instrument Tag Editor

9.1.5. New Instrument Function Block Library

New Instrument Function Block Library is a collection of preconfigured function blocks for frequently used control applications. Control programs in the instrument control field can be simply created using New Instrument FB library addition to the nV-Tool.

The following function block applications are prepared.
- Single Loop Control
- Cascade Control
- Ratio Control
- Selection Control
- Split Range Control
- Advanced Feed Forward Control
- Double Cross Limit Control
- Sequence Logics for Controller
- Sequence Logics for Motor and Electromagnetic Valve

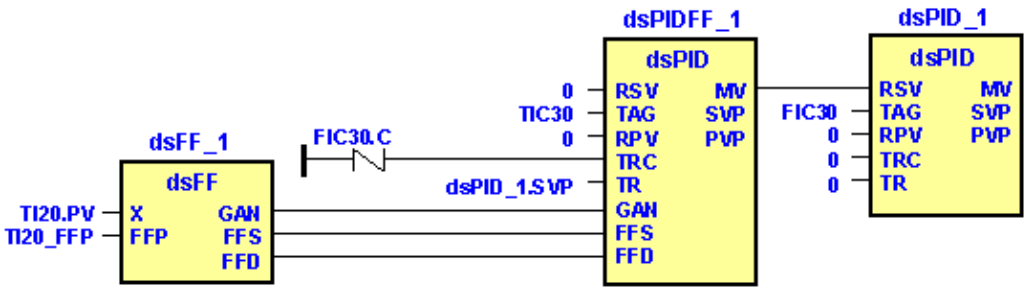

Fig. 54 Example of New Instrument Function Block Library

9.1.6. Worksheet Editor

This is a software package which allows drawing and editing control application programs without the nV-Tool. These programs can be imported/exported from/to nV-Tool.
It also allows “copy and paste” in a Word or Excel format to create system documentation..

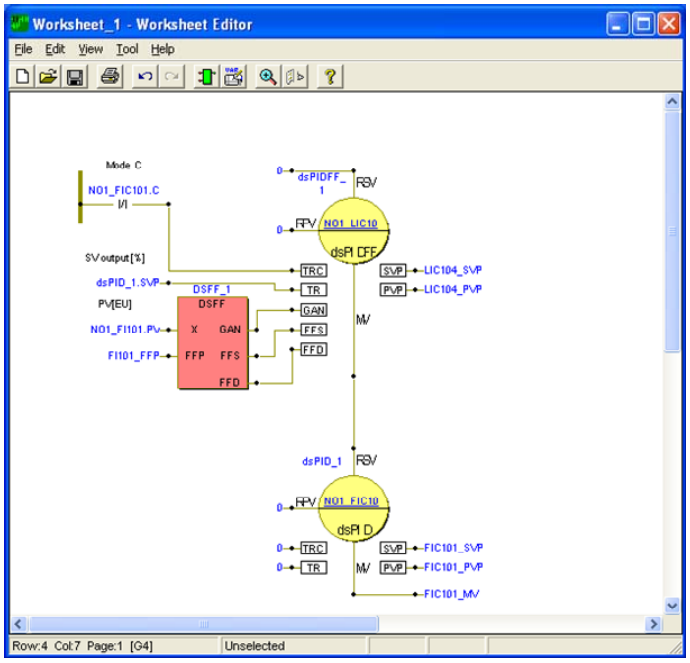

Fig. 55 Worksheet Editor

9.1.7. nv-Simulator

This software package simulates the nv-series Control Unit (PU821+FN812) to execute control application programs created by nV-Tool.
Without using a PU821 and FN812 you can rapidly test, check & finalize programs using the simulator and nV-Tool.
This simulator uses little resource and can be installed in the same PC as the nV-Tool.
Several PCs can be connected via Ethernet to the nV-Tool and simulator enabling the testing of larger system applications without PU821 and FN812.

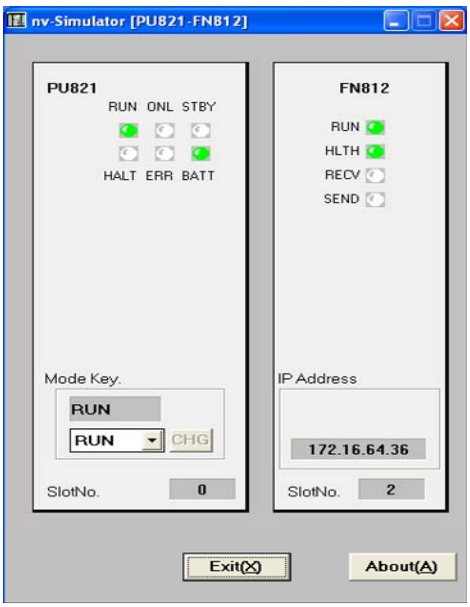

Fig. 56 nv-Simulator

9.1.8. nv-ADCOP

nv-ADCOP (ADvanced Control OPtimizer) is a field-oriented tool which brings out optimal performance from feed-back and feed-forward control of user applications work in Toshiba DCS controllers. nv-ADCOP has the following three functions.

1) *System Identification.*
2) *Control Optimization*.
3) *Performance Evaluation.*

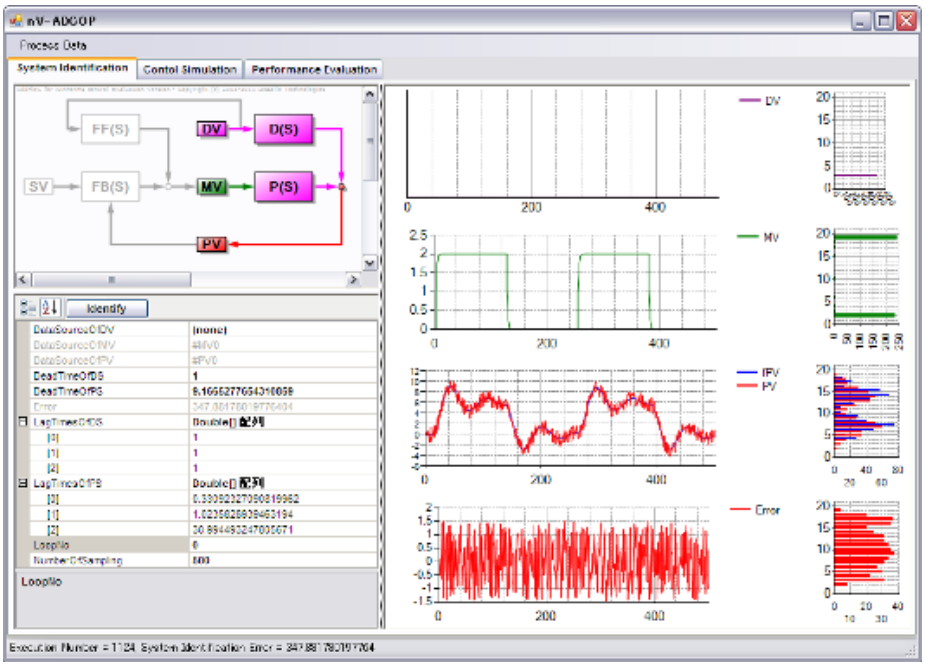

Fig. 57 nv-ADCOP as an Optimizer

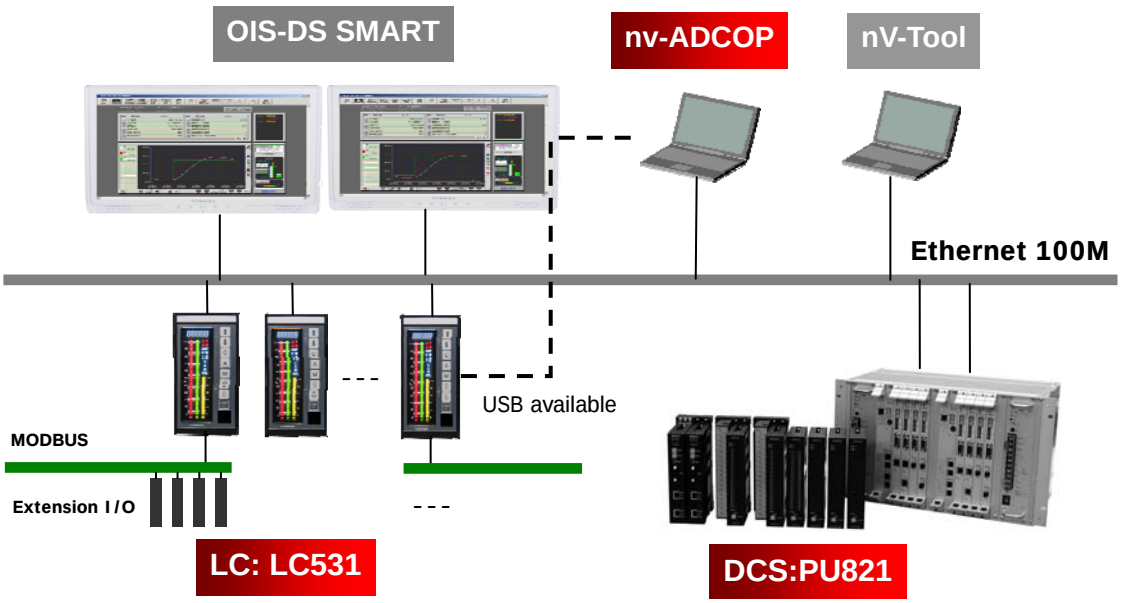

Fig. 58 System configuration for advanced control system

nv-ADCOP package has not only the optimizer software but also control function block library. Especially the library includes originally developed MD-PID that has the following advantages, compared with traditional PID.

1) *Performs excellent control for long dead time*
2) *Realizes optimal control for disturbance as well as set point change*
3) *Tunes against various process dynamics*

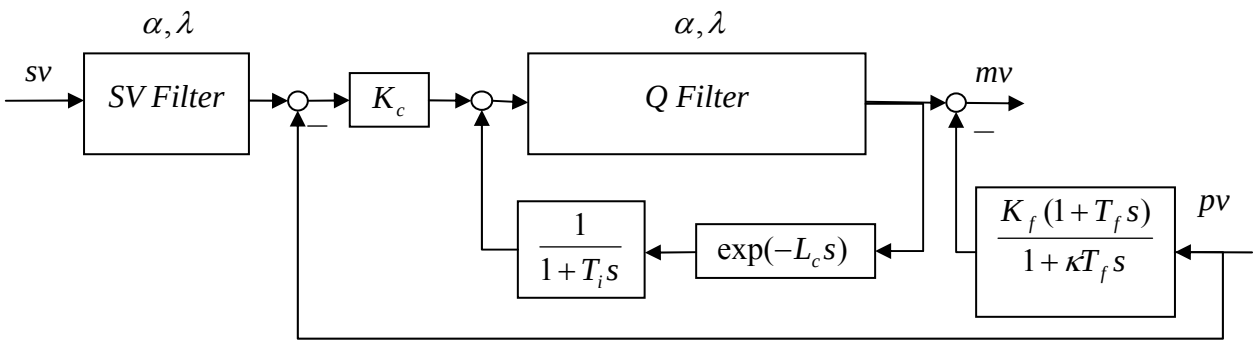

Fig. 59 Block diagram of MD-PID

9.1.9. Remote Engineering Package

This software package permits remote engineering from any office PC. Without having to make any changes to the enterprise network infrastructure or settings. A remotely located PC with nV-Tool can perform any engineering or maintenance securely and economically.

Remote Engineering Package has the following features.
- No need of changing firewall settings.
- No hardware such as IPSec router.
- Secure data encrypted by AES.
- Applicable to any applications such as SCADA software.

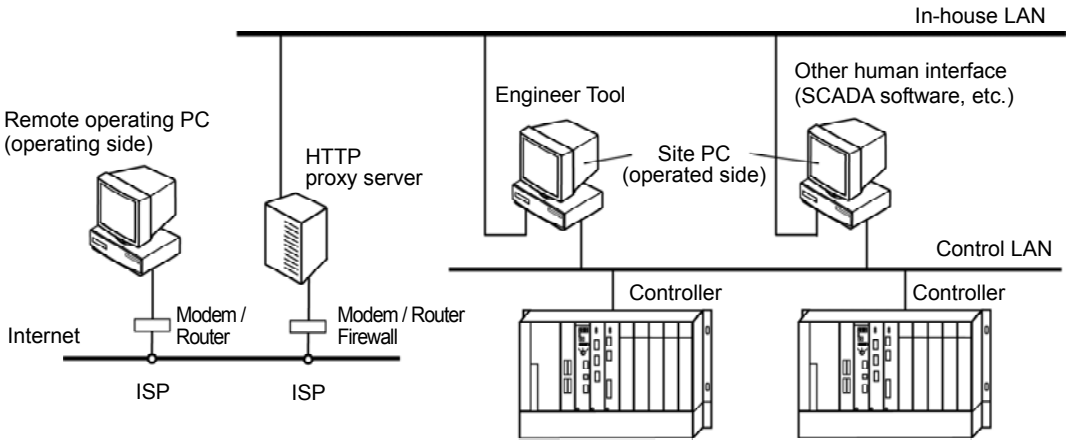

Fig. 60 Remote Engineering Configuration

9.2. HMI Engineering Functions

9.2.1. System Requirements of OIS-DS Engineering Tool

OIS-DS Engineering Tool constructs a system with OIS-DS and SVR-DS stations.
The tool, which is connected to the System via the information LAN or the control LAN, can execute, save and load the engineering data. Examples of the system are illustrated in Fig.45 and Fig.46.

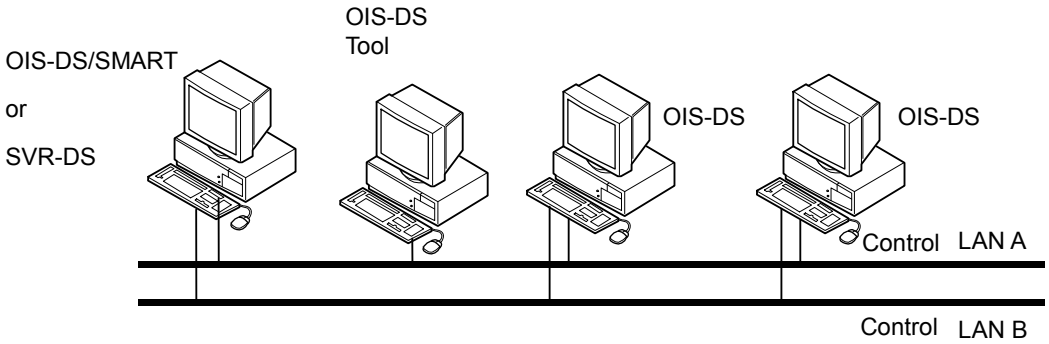

Fig. 61 Example of a system using the control LAN

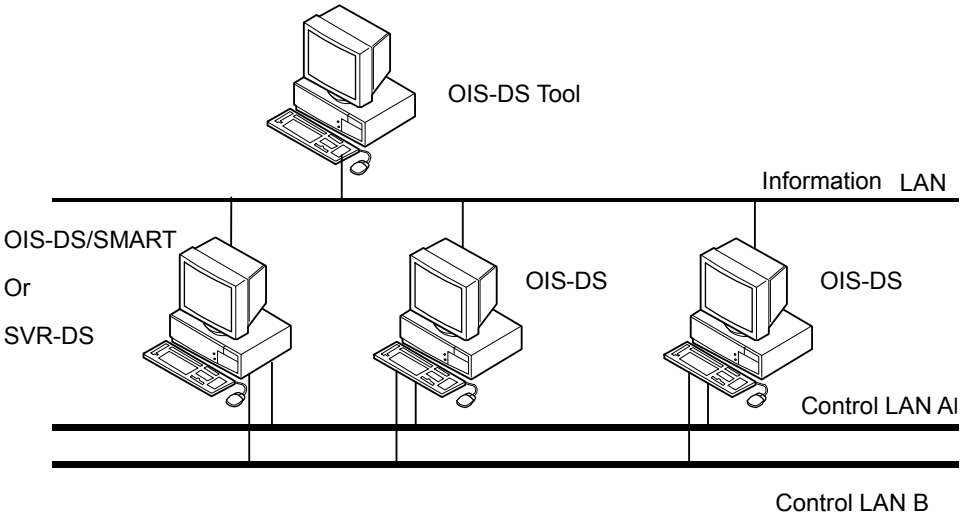

Fig. 62 Example of a system using the information LAN

9.2.2. Engineering Flow of OIS-DS Engineering Tool

Engineering flow for OIS-DS Engineering Tool is shown in Fig. 45.

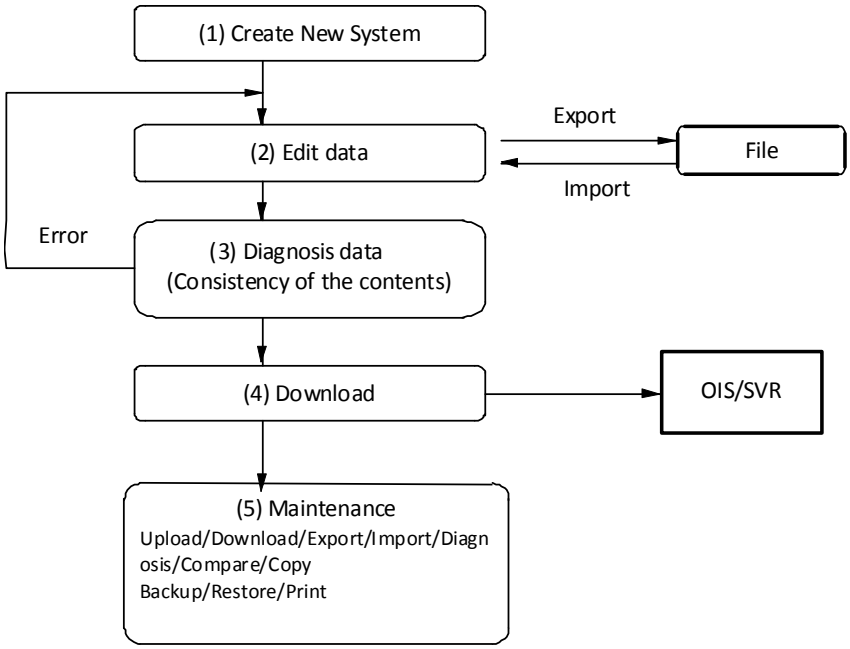

Fig. 63 Engineering Flow of OIS-DS Engineering Tool

9.2.3. Standard Functions of OIS-DS Engineering Tool

(1) Creating New System

When starting OIS-DS Engineering Tool for the first time after installation, a new system should be created. This forms the database of that OIS-DS/SVR-DS system.

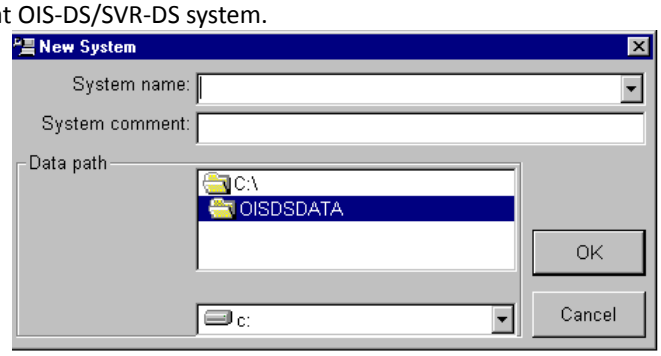

Fig. 64 New System

When you want to use the existing system, click Open System.

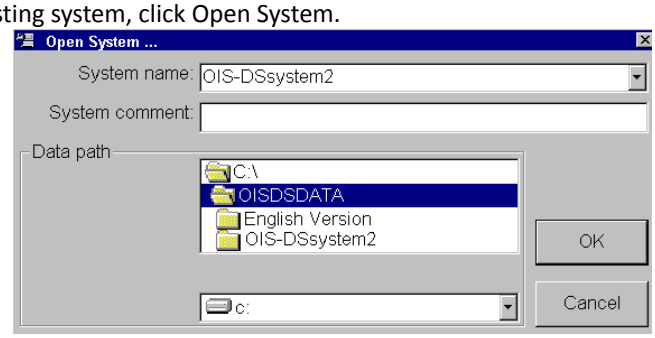

Fig. 65 Open System

(2)Edit data

Monitoring, Screen, Tag, Trend and Application functions can be found in the menu.

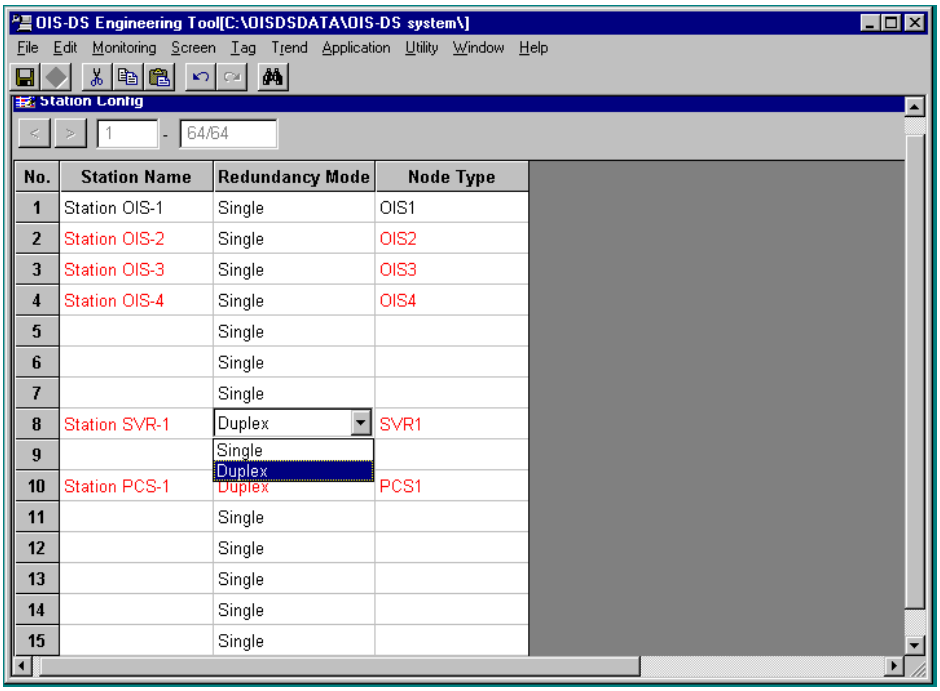

Fig. 66 Example of Registration (Station Configuration)

Monitoring
Includes information concerning monitoring of process alarms and system alarms.

Screen
Includes information concerning the menus, operation modes and alarm colors.

Tag
Includes information concerning OIS internal tags, OIS parameters and Guidance tags.

Trend
Includes information concerning historian data.

Application
Includes information concerning the condition of the user's application or report database.

This information can be edited in an external file (Excel or CSV file) by using "Export" / "Import" functionality under Utility.

(3) Diagnosis data

After editing, check the consistency of the contents by using "Data Diagnosis" under Utility.
Any errors in the contents need correction prior to proceeding.

(4) Download

All of the registration information can be stored in the OIS-DS/SVR-DS system using the "Download" function found in Utility menu.

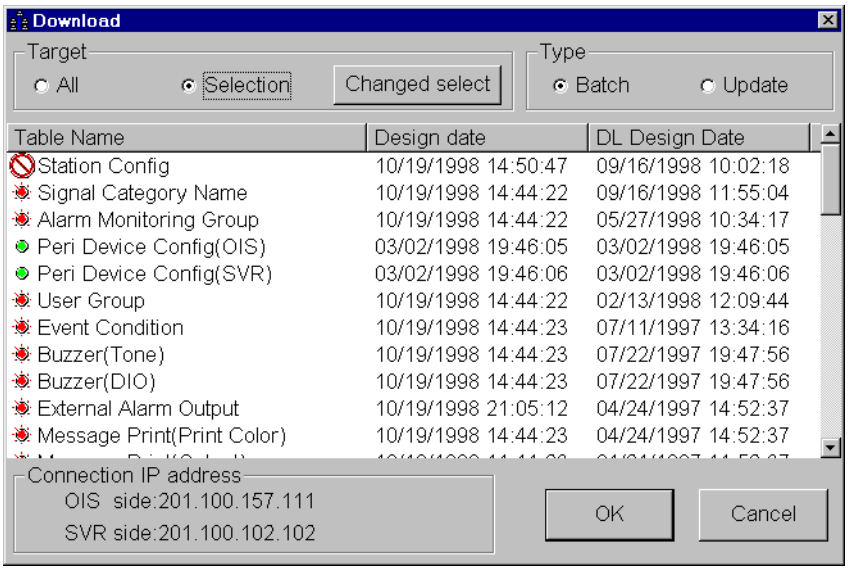

Fig. 67 Download

(5) Maintenance

After downloading the information, the system may be maintained using the Utility functions.
The Utility functionalities contain "Download", "Upload", "Import", "Export", "Data Diagnosis", "Copy", "Delete", Backup", "Restore", "Compare" and "Document Print".

Download/Upload
Contains the functions used to load the information from the OIS-DS/SVR-DS system or to store it on the system.

Import / Export
Contains the functions used to read or write the external database file (Excel or CSV file).

Data Diagnosis
Used to diagnoses the consistency of the registered contents.

Copy / Delete
Contains the functions used to copy or delete the information of the OIS-DS Tool using HDD, USB memory or other media.

Backup/ Restore
Contains the functions to used to read or write selected system information to the backup directory.

Compare
Contains the function to compare the system information to the OIS-DS/SVR-DS system data.

Document Print
Provides the functionality to print the information.

9.2.4. Optional Functions of OIS-DS Engineering Tool

Real Time Trend, 16 Tag Support and OIS Navigation that are optional packages can be supported by OIS-DS Engineering Tool.

(1) Real Time Trend Package

The registration of Real Time trend and the group can be supported by OIS-DS Engineering Tool.

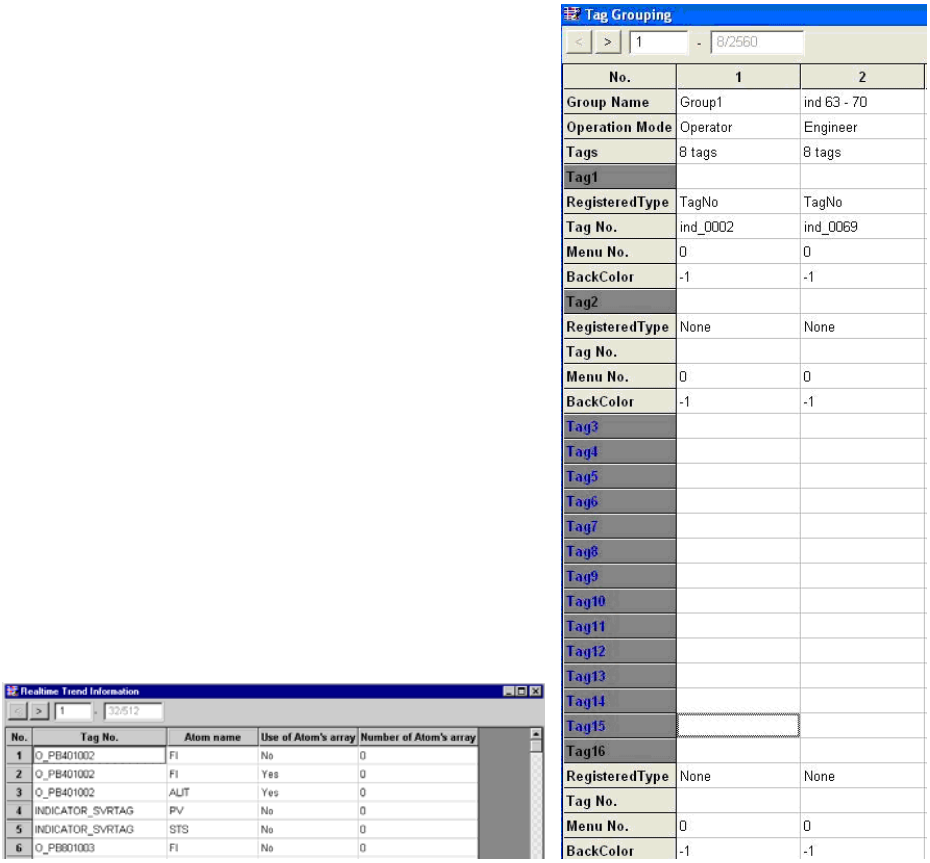

Fig. 68 Real Time Trend Info and Real Time Trend Group

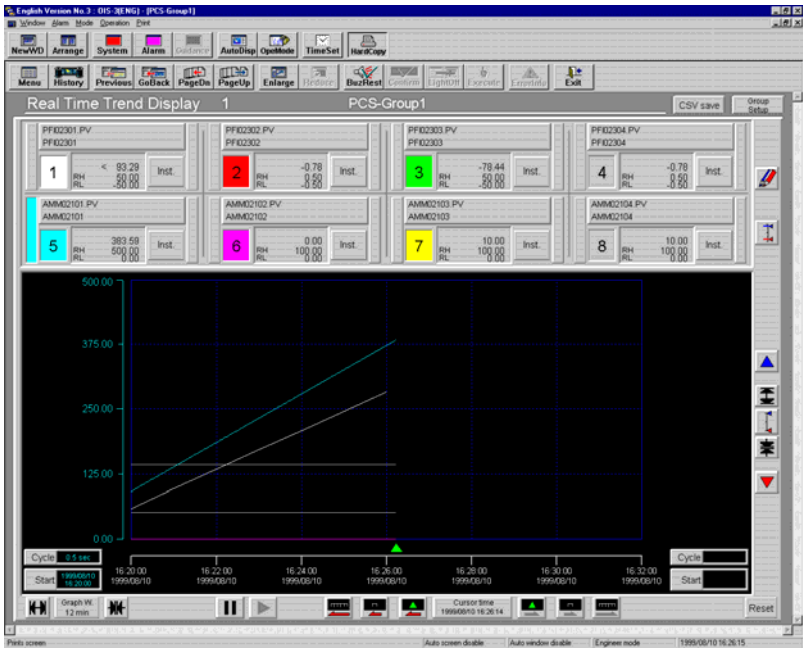

Fig. 69 Real Trend Screen

(2) 16 Tag Support Package

The registration of 16 Tag Support can be supported by OIS-DS Engineering Tool.

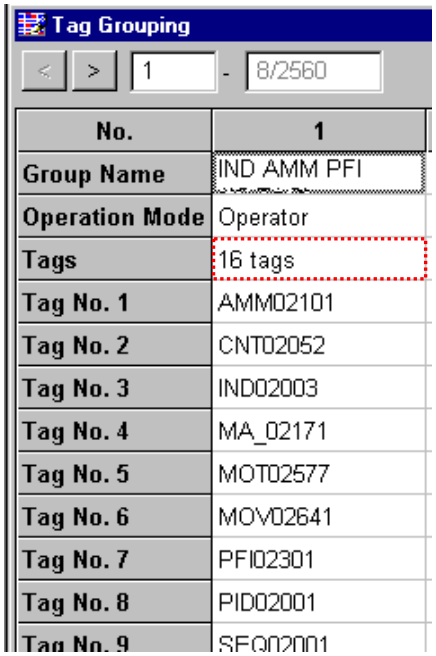

Fig. 70 Tag Grouping

Fig. 71 Tag Group Screen (OIS-DS)

(3) OIS Navigation Package

When this software package for OIS-DS and OIS-DS tool is installed the information for OIS Navigation can be registered.

Graphic Menu
Registers a maximum of 4096 graphic screens.

Tag Grouping
Registers the tag grouping.

Navigation
Registers the OIS navigation functionalities. The following screens are available.
Operation Mode (Ope Mode) / Alarm Condition (Alm.Cond) / Total Group (Total Group: Item, Total Group: Tree) / Favorites (Favorites: Item, Favorites :Tree) / Screen (Screen :Item, Screen :Tree)

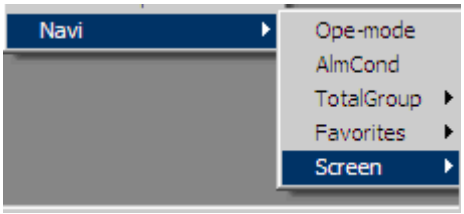

Fig. 72 Menus for OIS navigation package

9.2.5. OIS-DS Graphic Editor and Simulator

Graphic Editor is a software package to develop specific graphic views for OIS-DS.
It is simple for users to create the graphic views which have both static & dynamic display elements.
Without actual control stations, the dynamic displays can be tested by changing data of the assigned tags using the Graphic Simulator contained in this package.

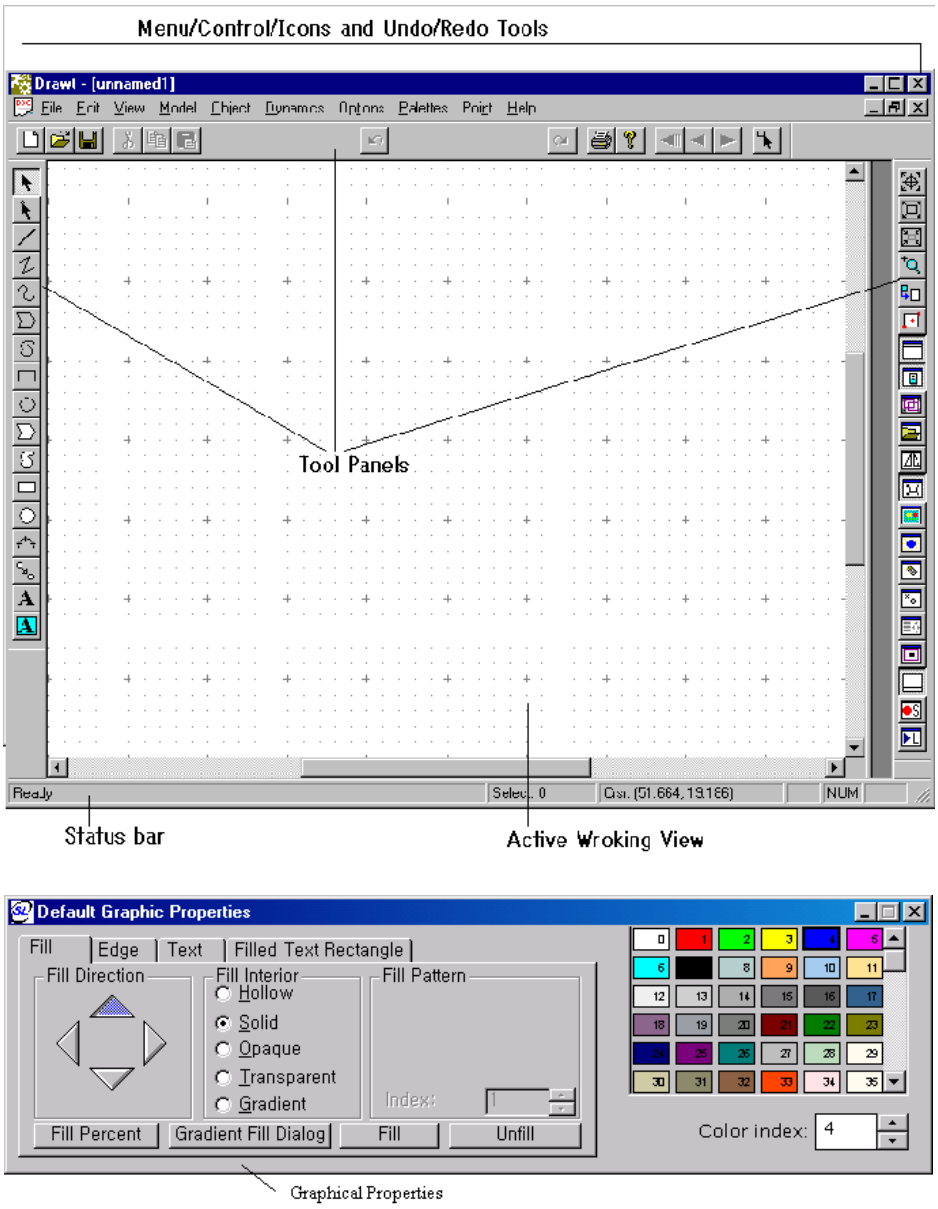

Fig. 73 Graphic Editor for OIS-DS

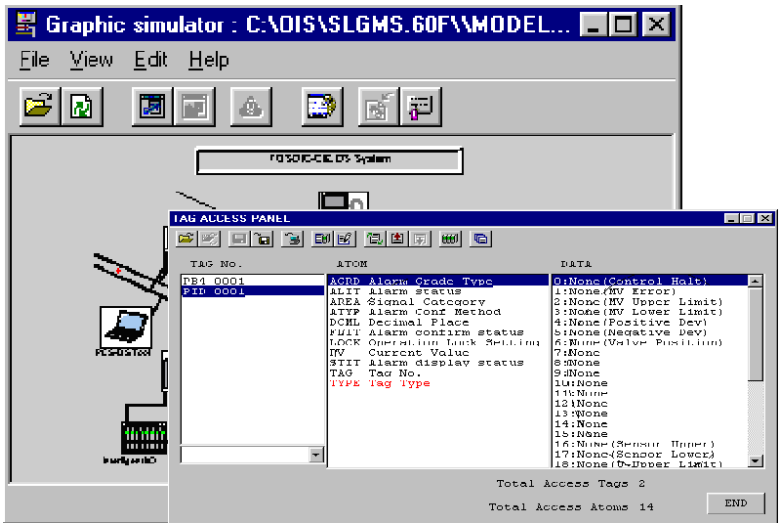

Fig. 74 Graphic Simulator

Engineering Flow of Graphic Editor is show in Fig.57.

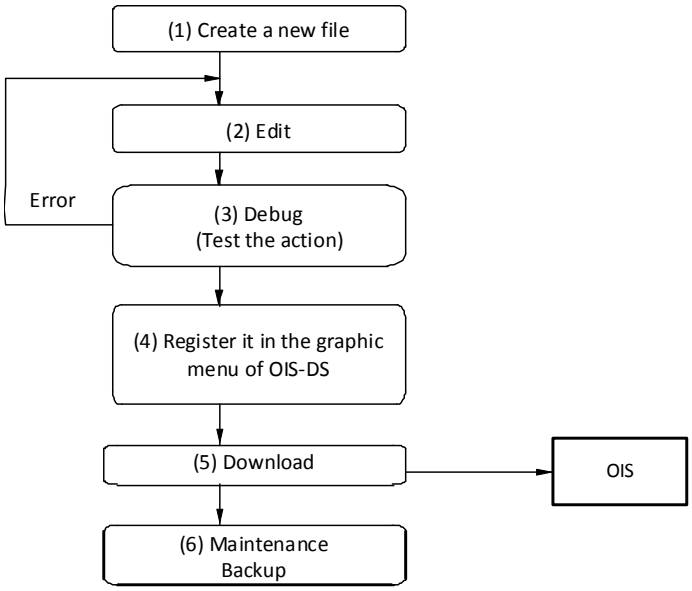

Fig. 75 Engineering Flow of Graphic Editor

(1) Create a new file

Click [File] Menu-[New with background] to open a new graphic view.

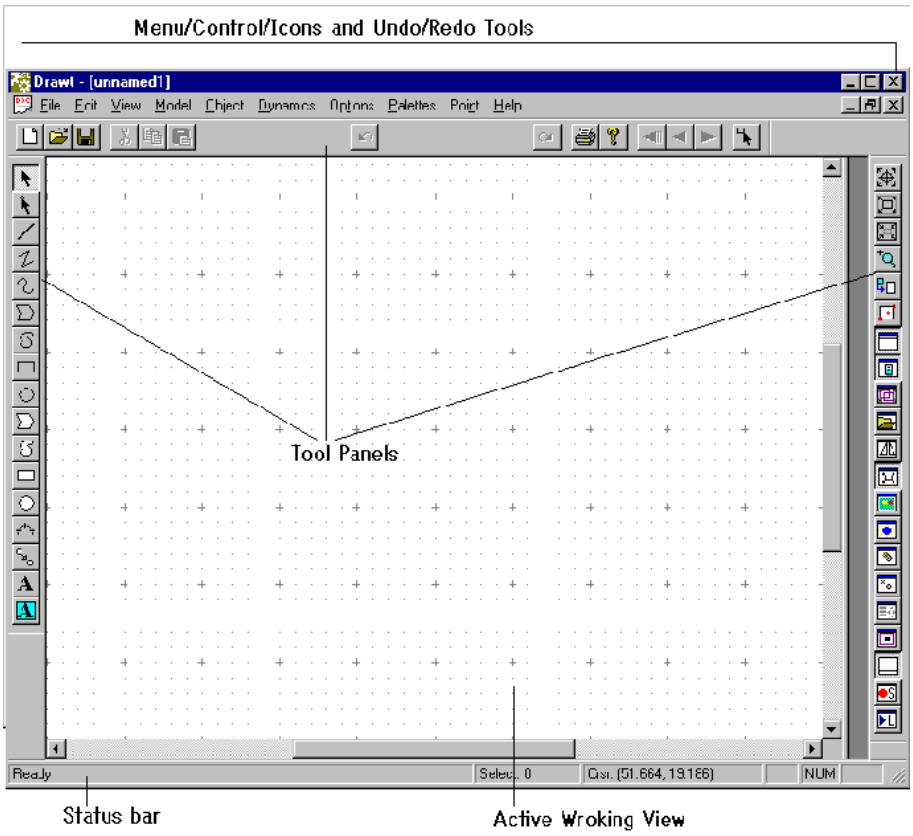

Fig. 76 Create a New File

(2) Edit

Create a graphic model using various kinds of prepared sub-models.

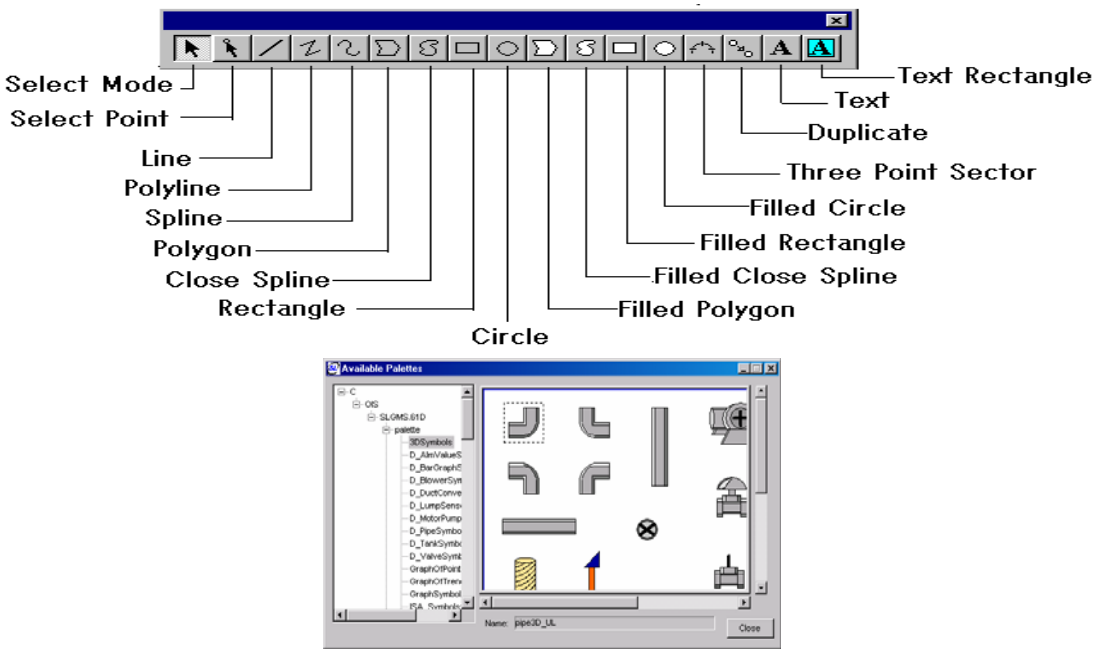

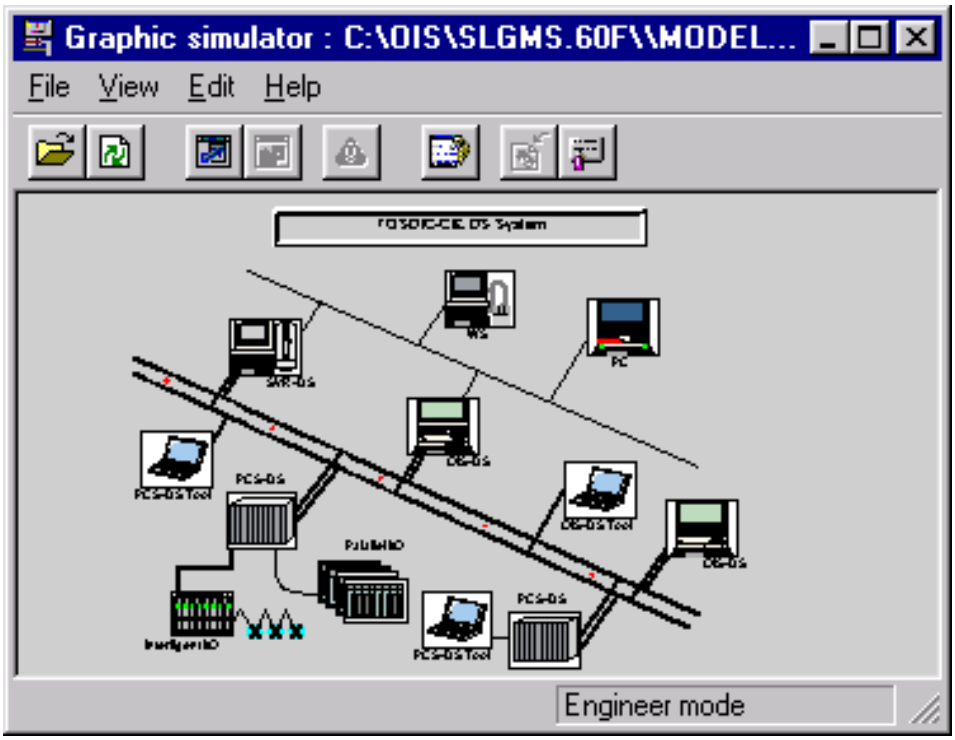

Fig. 77 Tools, Palette of Objects and a Sample Graphic

(3) Debug

Use Graphic Simulator to test the graphic models.
Virtual data of each assigned tag and confirm the dynamic display of your graphic view.

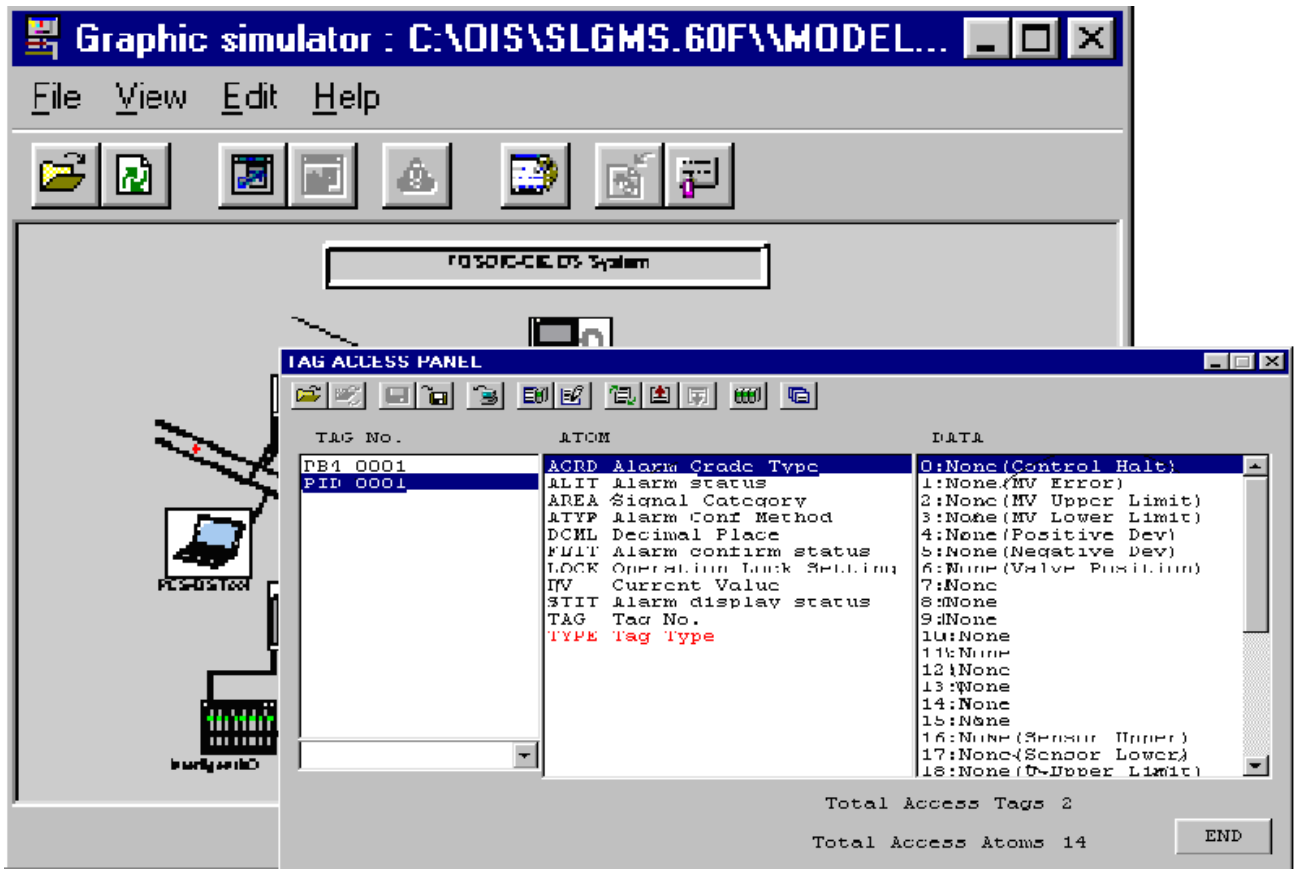

Fig. 78 Graphic Simulator

(4) Register Graphic Views with Graphic Menu

After testing a graphic model, register it in the OIS-DS graphic menu by using OIS-DS Engineering Tool.

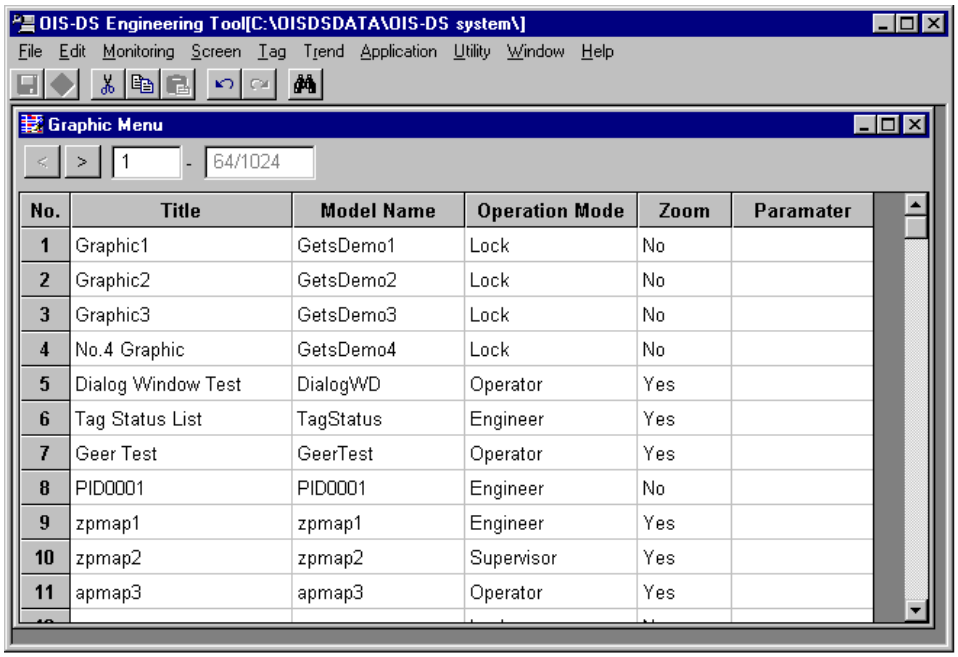

No.	Title	Model Name	Operation Mode	Zoom	Paramater
1	Graphic1	GetsDemo1	Lock	No	
2	Graphic2	GetsDemo2	Lock	No	
3	Graphic3	GetsDemo3	Lock	No	
4	No.4 Graphic	GetsDemo4	Lock	No	
5	Dialog Window Test	DialogWD	Operator	Yes	
6	Tag Status List	TagStatus	Engineer	Yes	
7	Geer Test	GeerTest	Operator	Yes	
8	PID0001	PID0001	Engineer	No	
9	zpmap1	zpmap1	Engineer	Yes	
10	zpmap2	zpmap2	Supervisor	Yes	
11	apmap3	apmap3	Operator	Yes	

Fig. 79 Graphic Menu

(5) Download

Download the assigned graphic menu information to each OIS-DS using the OIS-DS Engineering Tool.
Install the graphic models onto each OIS-DS using the OIS-DS Graphic Editor, (click [File]-[Install]).

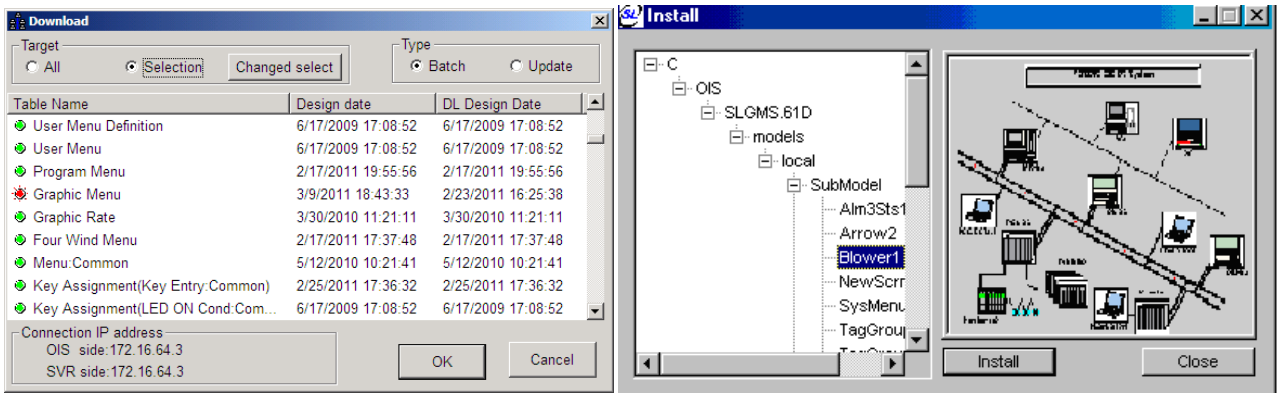

Fig. 80 Download and Install

(6) Maintenance

The "Backup" functionality can be utilized to maintain your created graphics.

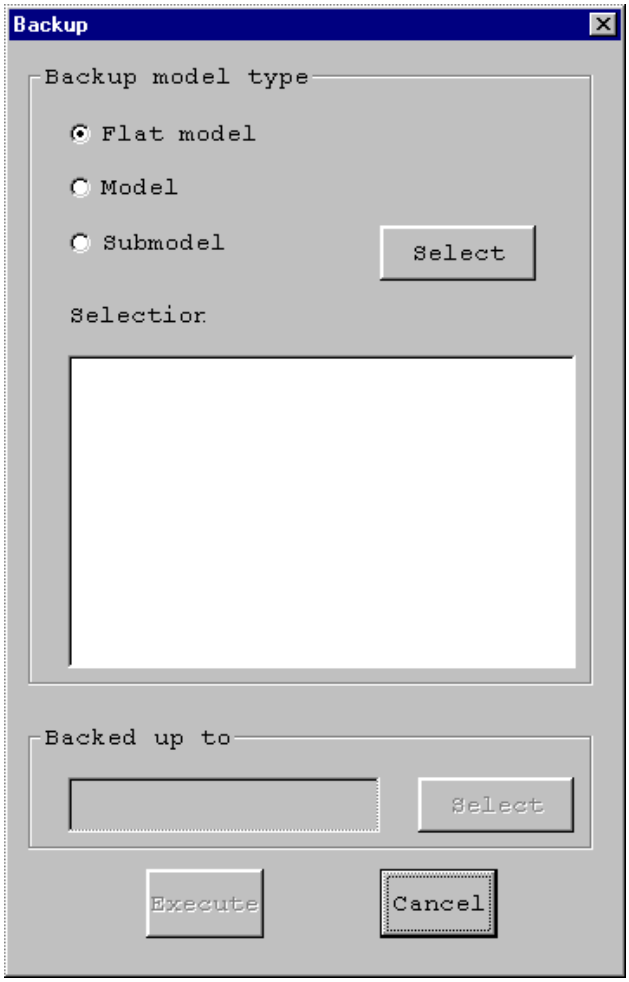

Fig. 81 Backup

By following the above procedure testing and installing the application graphics for OIS-DS using the Graphic Editor and OIS-DS Engineering Tool is a simple task.

Appendix 1. Hardware list of nv system components for DCS

Group	Part Number	Identification	Specifications
Base Unit			
	HBU816**S	BU816	Single configuration, peripheral slot x 6, power slots available for duplex, front mounting
	HBU825**S	BU825	Duplex configuration, peripheral slot x 5, front mounting
	HBU816R*S	BU816R	Single configuration, peripheral slot x 6, power slots available for duplex, rear mounting
	HBU825R*S	BU825R	Duplex configuration, peripheral slot x 5, rear mounting
Fan Unit			
	HFA816**S	FA816	For single configuration, fan x 3, front mounting, Successor of FA813
	HFA825**S	FA825	For duplex configuration, fan x 4, front mounting, Successor of FA824
	HFA816R*S	FA816R	For single configuration, fan x 3, rear mounting
	HFA825R*S	FA825R	For duplex configuration, fan x 4, rear mounting
Power Supply Module			
	HPS891**S	PS891	100/200Vac power supply, output: 5V-25A、12V-1A
	HPS835**S	PS835	24Vdc power supply, output: 5V-25A、12V-1A
CPU Module			
	HPU811**S	PU811	CPU module type1, duplex available, for electrical control
	HPU821**S	PU821	CPU module type2, duplex available, for instrumentation control
Transmission Module			
	HEN811**S	EN811	General purpose Ethernet interface GB/100MB (Electrical, single)
	HFN812**S	FN812	Ethernet interface for connecting OIS-DS GB/100MB (Electrical, dual)
	HTN821**S	TN821	TC-net 100 interface (Optical, single)
	HTN822**S	TN822	TC-net 100 interface (Optical, dual)
TC-net I/O Base			
	HBU901**S	BU901	Base for TC-net I/O interface (SIO)
	HBU902A*S	BU902A	Terminal base for digital I/O
	HBU903A*S	BU903A	Terminal base for analog I/O
	HBU904A*S	BU904A	Terminal base for analog I/O
	HBU905**S	BU905	Connector type base
	HBU906A*S	BU906A	Terminal block type base for power I/O module
	HBU927F*S	BU927F	Base unit for CIE6000 replacement
	HBU928F*S	BU928F	Base unit for LP918B
	HBU929F*S	BU929F	Base unit for TC-net I/Os
TC-net I/O Interfaces			
	HSA911**S	SA911	SIO with electrical interface
	HSA912**S	SA912	SIO with optical interface
	HSA931**S	SA931	SIO with electrical interface for LP918B
	HSA941**S	SA941	SIO with electrical interface for AI959B/AO969B
	HSA942**S	SA942	SIO with optical interface for AI959B/AO969B
	HSA961**S	SA961	SIO for CIE6000 replacement (Electrical)
	HSA962**S	SA962	SIO for CIE6000 replacement (Optical)
model3000 I/O Adapter			
	HIA931**S	IA931	Adaptor for G3 I/O
TC-net Special I/O Modules			
	HFL911**S	FL911	FL-net interface module
	HMD911**S	MD911	Modbus-RTU module (with RS-232C port)

Group	Part Number	Identification	Specifications
	HEN911**S	EN911	Ethernet module for TC-net I/O bus connection
	HPA912**S	PA912	Profibus-DP Master module
TC-net peripheral devices			
	UTNH23A	UTNH23A	Optical shared hub unit for TC-net 100（A line)
	UTNH23B	UTNH23B	Optical shared hub unit for TC-net 100（B line)
	JTNI21	JTNI21	TC-net 100 PCI bus card (Optical single bus)
	JTNI22	JTNI22	TC-net 100 PCI bus card (Optical duplex bus)
	JTNI41	JTNI41	TC-net 100 PCI bus card 3.3V (Optical single bus) for Windows
	JTNI42	JTNI42	TC-net 100 PCI bus card 3.3V (Optical duplex bus) for Windows
	JTNI41LE	JTNI41LE	TC-net 100 PCI bus card 3.3V (Optical single bus) for LinuxEP
	JTNI42LE	JTNI42LE	TC-net 100 PCI bus card 3.3V (Optical duplex bus) for LinuxEP
	HRP913**S	RP913	Electrical/Optical convert module
Accessories			
	HTR901**S	TR901	TC-net I/O bus terminator (Attached to BU901 (2pcs))
	HJC911**S	JC911	TC-net I/O CJC terminal（Attached to BU904A (1pc))
	HCN9C3	CN9C3	TC-net I/O bus connection cable (Length : 3cm) (Attached to BU902A/903A/904A/905/906A/IA931 (1pc))
TC-net I/O Options			
	HEX911**S	EX911	Adapter for checking I/O（for general I/O)
	HEX912**S	EX912	Adapter for checking I/O（for power I/O)
	HBB921**S	BB921	Busbar for TC-net I/O terminal unit (for BU902A / BU906A)
	HBB931**S	BB931	Busbar for TC-net I/O terminal unit (for BU902A)
	HTR928**S	TR928	Terminator module for BU903. 8pts, 250 ohm (For 0-20mA/0-5V conversion. ON/OFF switch ea point attached.)
	HTR929**S	TR929	Terminator module for BU903. 16pts, 250 ohm (For 0-20mA/0-5V conversion. ON/OFF switch ea point attached.)
Peripheral			
	HBP803*AS	BP803	Blank panel with 12HP width (3 slot)
	HBP801*AS	BP801	Blank panel with 4HP width (1 slot)
	HBP80B*AS	BP80B	Back cover for front mounting base unit (BU816, BU825)
	HBT812*AS	BT812	Battery (Successor of BT811)
	HSP900*AS	SP900	Dummy module
	UTMN6	UTMN6	I/O bus terminator (120 ohm) 4pcs/set
Others			
	UMAS3C	UMAS3C	Cable marshaling unit for VLCPX1/2 modules
	UMAS4C	UMAS4C	Cable marshaling unit for VLCPX4 modules

Group	Part Number	Identification	Specifications		
			I/O point	Isolation	Description
TC-net I/O Modules					
	HDI934**S	DI934	32	N	24Vdc 5mA, digital filter
	HDI944**S	DI944	32	N	48Vdc 2.5mA, digital filter
	HDI934T*S	DI934T	32	N	24Vdc 8mA (Note 1), digital filter
	HDI934S*S	DI934S	32	N	24Vdc 5.2mA, with strobe function
	HDI935**S	DI935	64	N	24Vdc 4mA, digital filter
	HDI936**S	DI936	16	Y	24Vdc 8mA, digital filter, independent common line
	HDI937**S	DI937	16	N	24Vdc 8mA, contact type input
	HIN956**S	IN956	16	Y	100/120Vac(dc) 8mA(2.3mA), independent common line
	HIN966**S	IN966	16	Y	200/240Vac-10mA, independent common line
	HDO934**S	DO934	32	N	24Vdc 100mA, transistor sink type output
	HDO935**S	DO935	64	N	24Vdc 50mA, transistor sink type output
	HDO936**S	DO936	16	Y	24Vdc-2.0A, FET output, independent common line (without fuse)
	HRO966**S	RO966	16	Y	240Vac/30Vdc-1.5A (100Vdc-0.1A), (resistor load)
	HAC963**S	AC963	16	N	100/240Vac-2A/ch, 4 ch isolated (with 3A fuse) (Note 1), triac output
	HAI914**S	AI914	4	Y	0-5V 14bit, sampling period: 1msec
	HAI919**S	AI919	16	N	0-5V 14bit, sampling period: less than 50ms.
	HAI929D*S	AI929D	16	N	(AI919 with distribution circuit)
	HAI918**S	AI918	8	Y	0-5V 14bit, sampling period: greater than 0.5ms.
	HAI918F*S	AI918F	8	Y	0-5V 16bit, sampling period: greater than 0.5ms.
	HAI928**S	AI928	8	Y	0-20mA, 14bit, sampling period: 0.5ms (bipolar format, MSB matching)
	HRT918**S	RT918	8	Y	RTD: Pt100, JPt100
	HRT918C*S	RT918C	8	N	RTD: Pt100, JPt100 (type and range can be set at each point.)
	HTC919**S	TC919	16	Y	TC: B, R, S, J, K, T, E type) (type and range can be set at each point.)
	HAO928**S	AO928	8	Y	0-20mA 14bit, response: less than 1ms
	HAO928F*S	AO928F	8	Y	0-20mA 16bit, response: less than 1ms
	HPI918**S	PI918	8	Y	DC-50Hz (contact)/DC-50kHz, single phase pulse: 12-24V
	HPI924**S	PI924	4	Y	Bi-polar pulse input: DC-50KHz, pulse voltage: 9.6-26.4V, 12mA, 1.25µsec/1ch
	HLP918B*S	LP918B	->	->	Loop module, AI: 12ch, AO（Non Isolated）: 8ch, DI: 8ch, DO: 8ch
	HLP928B*S	LP928B	->	->	Loop module, AI: 12ch, PO: 8ch, DI: 8ch, DO: 8ch
	HDI934I*S	DI934I	32	N	Low input current type of DI934 module, 24Vdc 4mA, digital filter
	HAI959B*S	AI959B	16	N	AI module with signal conditioner
	HAO969B*S	AO969B	16	N	AO module with signal conditioner
	HPI948**S	PI948	8	N	Voltage instrumentation pulse input module
	HAI969**S	AI969	16	Y	MV/V input module with variable gain
	HIN954**S	IN954	32	N	100/120Vac(dc) , 8 points common
	HLP928B*S	LP928B	8	Y	Loop module, AI: 12ch, PO: 8ch, DI: 8ch, DO: 8ch
	HAI9A9B*S	AI9A9B	16	N	1-5V, 16bit, Analog input, Duplex available
	HAO9A9B*S	AO9A9B	16	N	4-20mA 16bit, Analog output, Duplex available
	HPO919**S	PO919	16	N	Pulse width / Pulse row (high speed/low speed)

Group	Part Number	Specifications
Signal conditioner		
	CISO5	mV voltage input isolator: DC 5-200 mV
	CISO6	Current input isolator: 1-5 VDC
	CISO7	Voltage input isolator: DC 4-20 mA
	CDIS7	2-wire transmitter current input isolator: DC 4-20 mA
	CTC**	Thermocouple temperature input isolator: JIS thermocouple input
	CRTD*	RTD temperature input isolator
	CCTI1	CT input isolator; AC signal CCTI1-11: AC 0~1 A, CCTI1-21: AC 0-5 A
	CPTI1	PT input isolator, AC signal CPTI1-11: 0-100 VAC, CPTI1-21: 0-110 VAC, CPTI1-31: 0-150 VAC, CPTI1-41: 0-250 VAC
	CISO8	Current output isolator: DC 4-20 mA
Signal conditioner terminal unit		
	UTBA7	Terminal unit for Analog input
	UTBA8	Terminal unit for Analog output

Group	Part Number	Identification	Specifications
TC-net I/O loop cable (Electrical)			
	HCM901E	CM901E	Length 1m, TC-net I/O loop cable (Electrical)
	HCM903E	CM903E	Length 3m, TC-net I/O loop cable (Electrical)
	HCM905E	CM905E	Length 5m, TC-net I/O loop cable (Electrical)
	HCM907E	CM907E	Length 7m, TC-net I/O loop cable (Electrical)
	HCM910E	CM910E	Length 10m, TC-net I/O loop cable (Electrical)
TC-net I/O loop cable (Optical)			
	HCM901P	CM901P	Length 1m, TC-net I/O loop cable (Optical)
	HCM903P	CM903P	Length 3m, TC-net I/O loop cable (Optical)
	HCM905P	CM905P	Length 5m, TC-net I/O loop cable (Optical)
	HCM907P	CM907P	Length 7m, TC-net I/O loop cable (Optical)
	HCM910P	CM910P	Length 10m, TC-net I/O loop cable (Optical)
TC-net I/O bus cable			
	HCN9C9	CN9C9	TC-net I/O bus connection cable (Length : 9cm)
	HCN9R5	CN9R5	TC-net I/O bus inter-controller connection cable (Length : 0.5m)
	HCN910S	CN910S	TC-net I/O bus inter-controller connection cable (Length : 1m)
	HCN920S	CN920S	TC-net I/O bus extension cable (Length : 2m)
	HCN940S	CN940S	TC-net I/O bus extension cable (Length : 4m)
Other Cables			
	ZCDEYAA	ZCDEYAA	RS-232C connection for Engineering Tool (5m)
	HCN9R5C	CN9R5C	BU901 - UTBU7/8 Connection I/O bus cable

Group	Part Number	Specifications
PCS terminal block unit		
	UTST12	Straight type
	UTAI12	AI Straight type (With 250Ω jumper-pin selection)
	UTAO12	AO Straight type
	UTAM11	AI Straight type (With 250Ω jumper-pin selection)
	UTAM21	AI Straight type
	UTIN11	48V input
	UTIN21	110Vdc/110Vac input
	UTTR11	Power transistor output
	UTTA11	Triac output
	UTRO11	Relay output
	UTAI22	AI for use with signal conditioners. Up to sixteen signal conditioners can be mounted. CISO*1,CISO4,CTC*1,CRTD*,CDIS5,CDIS6,CSTR1,CIVC1,CHVI1
	UTA022	AO for use with signal conditioners. Up to sixteen signal conditioners can be mounted. CISO3,CSTR1,CIVC1
	UTAM31	AI for use with signal conditioners. Up to sixteen signal conditioners can be mounted. CISO*1,CISO4,CTC*1,CRTD*,CDIS5,CDIS6,CSTR1,CIVC1,CHVI1
	UBRO11	DC output terminal unit
	UBRI11	DC input terminal unit
	UBRI21	AC input terminal unit
	UBRI31	AC input terminal unit
	G7TC-ID16	DC 24V, DC100/110V digital input supplied by OMRON
	G7TC-IA16	AC100/110V, AC200/220V digital input supplied by OMRON
	G7TC-OC16	DC24V digital output supplied by OMRON
	UTST1R UTST1L	Straight type
	UTAI1R UTAI1L	AI Straight type (With 250Ω jumper-pin selection)
	UTAO1R UTAO1L	AO Straight type
	UTAM1R UTAM1L	AI Straight type (With 250Ω jumper-pin selection)
	UTAM2R UTAM2L	AI Straight type
	UTIN1R UTIN1L	48V input type
	UTAI2R UTAI2L	AI for use with signal conditioners. Up to sixteen signal conditioners can be mounted. CISO*1,CISO4,CTC*1,CRTD*,CDIS5,CDIS6,CSTR1, CIVC1,CHVI1
	UTAO2R UTAO2L	AO for use with signal conditioners. Up to sixteen signal conditioners can be mounted. CISO3,CSTR1,CIVC1
	UTAM3R UTAM3L	AI for use with signal conditioners. Up to signal conditioners can be mounted. CISO*1,CISO4,CTC*1,CRTD*,CDIS5,CDIS6,CSTR1, CIVC1,CHVI1
	UBRO1R UBRO1L	DC output terminal unit

Group	Part Number	Specifications
	UBRI1R UBRI1L	DC input terminal unit
	UBRI2R UBRI2L	AC input terminal unit

Group	Part Number	Specifications	Isolation	linearization
PCS compatible signal conditioner				
	CISO12	1-5Vdc Input	Yes	No
	CISO42	4-20mA Input	Yes	No
	CDIS52	4-20mA + Distributer	No	No
	CDIS62	4-20mA + Distributer	Yes	No
	CIVC12	4-20mA Input	No	No
	CRTD12-01	JPt100: 0-150 deg	Yes	No
	CRTD12-02	JPt100: 0-300 deg	Yes	No
	CRTD12-03	JPt100: 0-500 deg	Yes	No
	CRTD12-04	JPt100: -50-100 deg	Yes	No
	CRTD12-05	JPt100: -150-50 deg	Yes	No
	CRTD22-01	Pt100: 0-150 deg	Yes	No
	CRTD22-02	Pt100: 0-300 deg	Yes	No
	CRTD22-03	Pt100: 0-500 deg	Yes	No
	CRTD22-04	Pt100: -50-100 deg	Yes	No
	CRTD22-05	Pt100: -150-50 deg	Yes	No
	CRTD32-01	Ni508.4: -20-60 deg	Yes	No
	CTCK12-01	K: 0-300 deg	Yes	No
	CTCK12-02	K: 0-600 deg	Yes	No
	CTCK12-03	K: 0-1200 deg	Yes	No
	CTCK12-04	K: 600- 1200deg	Yes	No
	CTCT12-01	T: 0-300 deg	Yes	No
	CTCJ12-01	J: 0-200 deg	Yes	No
	CTCJ12-02	J: 0-400 deg	Yes	No
	CTCJ12-03	J: 0-600 deg	Yes	No
	CTCJ12-04	J: 300-600 deg	Yes	No
	CTCE12-01	E: 0-200 deg	Yes	No
	CTCE12-02	E: 0-400 deg	Yes	No
	CTCE12-03	E: 0-600 deg	Yes	No
	CTCE12-04	E: 0-800 deg	Yes	No
	CTCB12-01	B: 600-1700 deg	Yes	No
	CTCR12-01	R: 0-1000 deg	Yes	No
	CTCR12-02	R: 0-1600 deg	Yes	No
	CTCR12-03	R: 800-1600 deg	Yes	No
	CTCS12-01	S: 0-1000 deg	Yes	No
	CTCS12-02	S: 0-1600 deg	Yes	No
	CTCS12-03	S: 800-1600 deg	Yes	No
	CISO32	4-20mA output	Yes	No
	CSTR12	Signal through	No	No

Group	Part Number	Identification	Specifications
PCS terminal block unit connection cable			
	HCA930A*	CA930A*	Last character '*' : A(1m), B(2m), C(3m), D(4m), E(5m)
	HCA930B*	CA930B*	Last character '*' : A(1m), B(2m), C(3m), D(4m), E(5m)
	HCA930C*	CA930C*	Last character '*' : A(1m), B(2m), C(3m), D(4m), E(5m)
	HCA930D*	CA930D*	Last character '*' : A(1m), B(2m), C(3m), D(4m), E(5m)
	HCA930E*	CA930E*	Last character '*' : A(1m), B(2m), C(3m), D(4m), E(5m)
	HCA930F*	CA930F*	Last character '*' : A(1m), B(2m), C(3m), D(4m), E(5m)
	HCA930G*	CA930G*	Last character '*' : A(1m), B(2m), C(3m), D(4m), E(5m)
	HCA930H*	CA930H*	Last character '*' : A(1m), B(2m), C(3m), D(4m), E(5m)
	HCA930Z*	CA930Z*	Last character '*' : A(1m), B(2m), C(3m), D(4m), E(5m)

Group	Part Number	Identification
OIS-DS Peripherals		
	UOPK71E	Operator's Keyboard (Single loop, English)
	UOPK8E	Operator's Keyboard (8 loops, Main, English)
	UOPK82	Operator's Keyboard (8 loops, Remote)
	UKEY52	Key Unit for OIS-DS
	JOKC12	Operator Keyboard Controller (PCI card with cable)
	UOPK8UE	Operator Keyboard unit (UOPK8/UOPK82/UKEY52+Bezel)
	ZCDEWAA1011	Cable (UOPK8-JOKC12, 1m)
	ZCDEWAA2011	Cable (UOPK8-JOKC12, 2m)
	ZCDEWAA3011	Cable (UOPK8-JOKC12, 3m)
	ZCDEWAA4011	Cable (UOPK8-JOKC12, 4m)
	ZCDEWAA5011	Cable (UOPK8-JOKC12, 5m)
	OVERLAY61	OVERLAY SHEET(FOR UOPK8E,BLANK)
	OVERLAY62	OVERLAY SHEET(FOR UOPK82,BLANK)

Appendix2. Software list of nv system components for DCS

2.1 Unified Controller Engineering Tool and Packages

Group	Part Number	Identification	Description
Engineering Tool and Packages			
	HET81E4SS	HET81E4	Engineering tool (Stand-alone, English version)
	HET82E4SS	HET82E4	Engineering tool (Client-server, English version)
	GET9TEDSS	GET9TED	New instrumentation tag editor (English version)
	GET9NEDSS	GET9NED	New instrumentation function block library (English version)
	GET9SE1SS	GET9SE1	Work sheet editor (English version)
	GET9PE1SS	GET9PE1	Remote engineering package (English version)
	GET9WE1SS	GET9WE1	Synchro trend package (English version) (Unavailable for PU821)
	GET9RB1SS	GET9RB1	Permissive Fault Diagnosis package (English version) (Unavailable for PU821)
	HET8AB1SS	HET8AB1	nv Simulator software
	HET81E4SS*A	HET81E4A	Stand alone version (5 licenses pack)
	HET81E4SS*B	HET81E4B	Stand alone version (10 licenses pack)
	HET82E4SS*A	HET82E4A	Client server version (5 license pack)
	HET82E4SS*B	HET82E4B	Client server version (10 licenses pack)
	EATOPCP*	EATOPCP*	OPC Server package and configuration tool (English version)

2.2 HMI Software and Package

(1) OIS-DS Standard Software

Group	Part Number	Identification	FUNCTIONALITY			
			MMI	Server	Graphic	Bundled software
A. OIS-DS Standard Software (Largest configuration : OIS * 22 pcs, Server function *2 pcs (Redundant))						
	ECHIDSU*	OIS-DS5* Standard Software	○			
	ECSVGBU*	SVR-DS6* Standard Software		○		
	ECHIGBD*	OIS-DS Graphic Editor (Combined with ECHIDSU* per PC)			○	
	ECHIDSS*	OIS-DS6* Standard Software(with SVR)	○	○		
B. OIS-DS SMART (Largest configuration : OIS * 8 pcs, Server function *2 pcs (Redundant))						
	ECSMTDD*	OIS-DS SMART Standard Software (with SVR, Graphic Editor and software packages shown in the column to the right)	○	○	○	1), 3), 4), 15), 14*)
	ECSMTRD*	OIS-DS SMART Standard Software (with SVR and software packages shown in the column to the right.)	○	○		3), 4)
	ECHIDSU*	OIS-DS5* Standard Software	○			
By the licensing agreement software from each group (Standard/SMART) cannot be connected on LAN same as software from the other groups except in the case of OIS-DS5* standard software (ECHIDSU*).						

(2) OIS-DS Engineering Tool and Packages

Group	Part Number	Description	No.
Engineering Tool and Package			
	ECETDOD*	OIS-DS Tool	1)
	ECHIRPU*	OIS-DS Report Editor	2)
	ECPGRTD*	Realtime trend package	3)
	ECPH16D*	16 Tags group package	4)
	ECPHDPD*	DPCS package	5)
	ECPHHCD*	Advanced Hard Copy package	6)
	EC2CRTD*	OIS 2CRT package software	7)
	ECPRMWD*	Remote OIS software	8)
	ECPHAHD*	Historical Data Auto Save Package	9)
	ECONSPD*	ONS Package(Solaris)	10)
	ECONPPD*	ONS Package(PC) 1set	11)
	ECOPCDD*	OPC DA2.0 Support Software	12)
	ECOPCAD*	OPC AE Support Software	13)
	ECPLCPD*	PLC Server Package (for individual PC)	14)
	ECPLCTD*	PLC Server Engineering Tool	15)
	ECPLT3D*	Support Library T3H	16)
	ECPLMLD*	Support Library MELSEC	17)
	-	PLC Server function (OIS-DS/SMART combined)	14*)

Appendix3. Hardware dimensions of nv system components for DCS

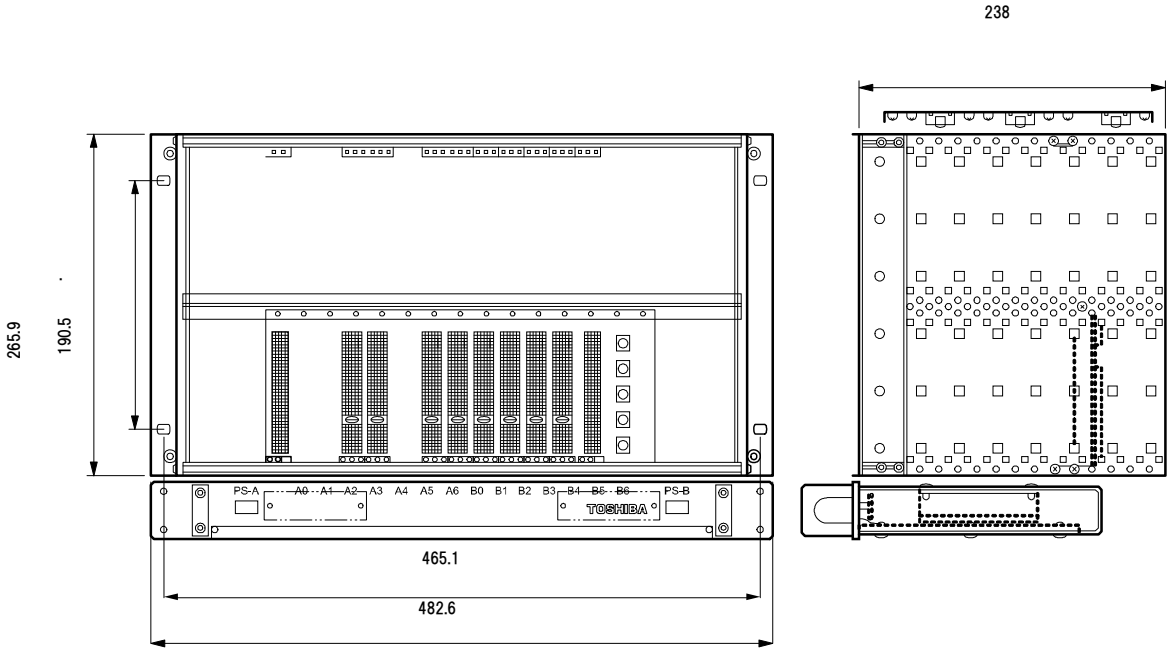

Fig. 1 Outside dimensions of base unit BU816 and fan unit FA813/FA816

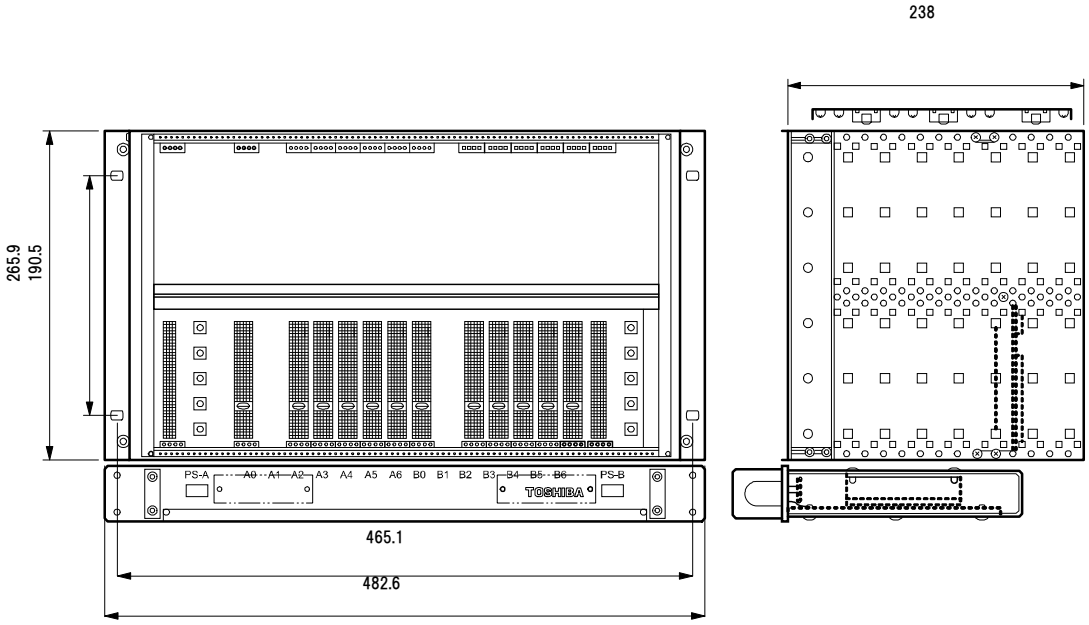

Fig. 2 Outside dimensions of base unit BU825 and fan unit FA824/FA825

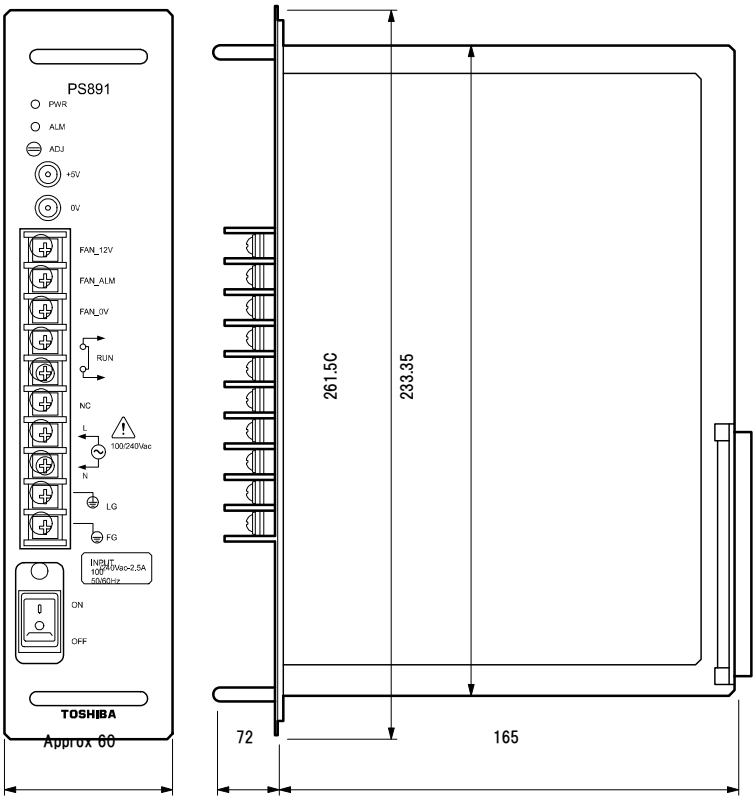

Fig. 3 Outside dimensions of power module PS891

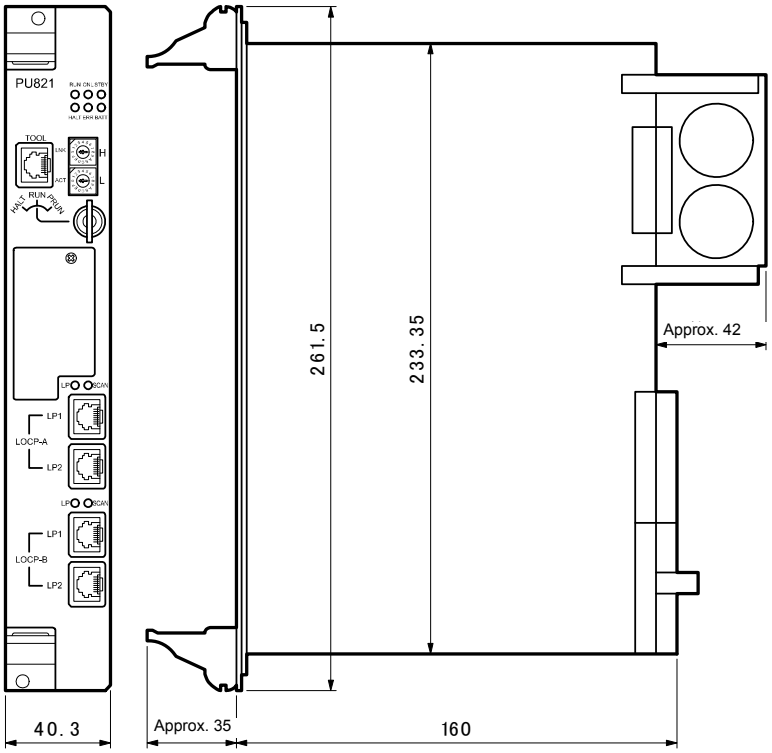

Fig. 4 Outside dimensions of controller modules PU821

■TC-net I/O Sub System Dimensions

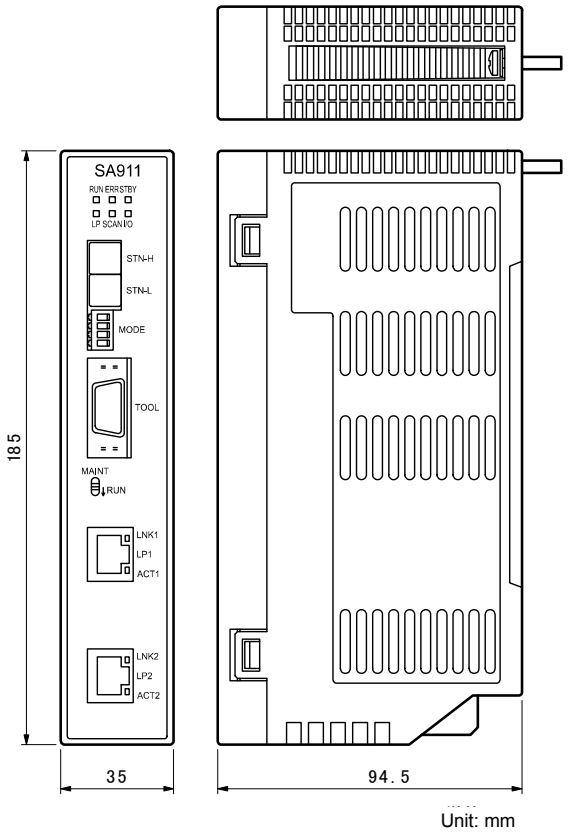

Fig. 5 SA911/ SA931/ SA941/SA961 outside dimension

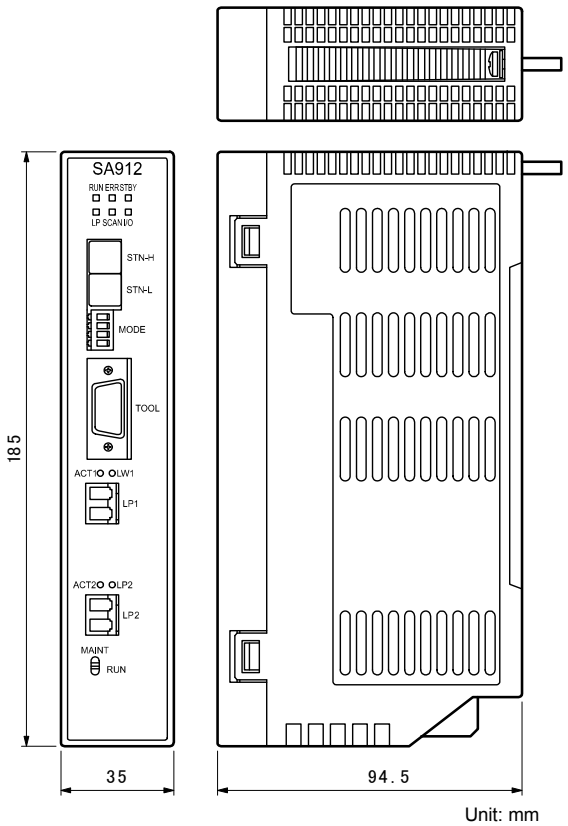

Fig. 6 SA912/SA942/SA962 outside dimensions

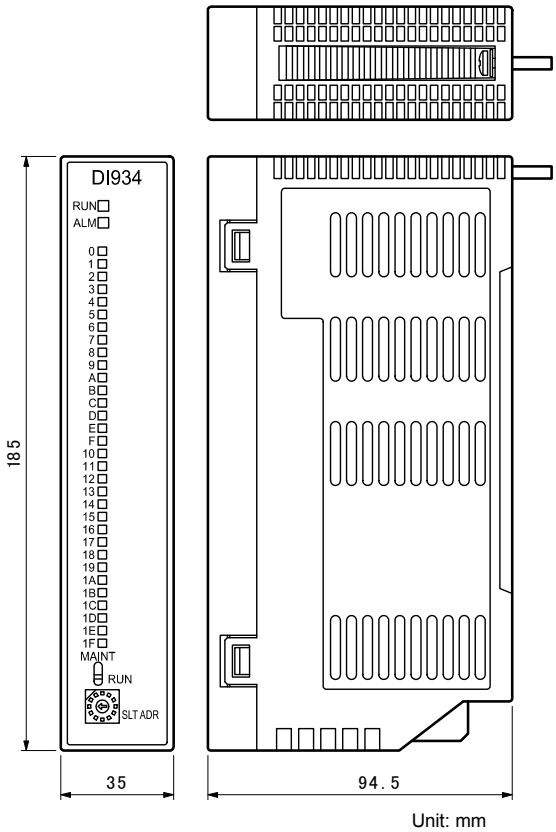

Fig. 7 I/O module outside dimensions

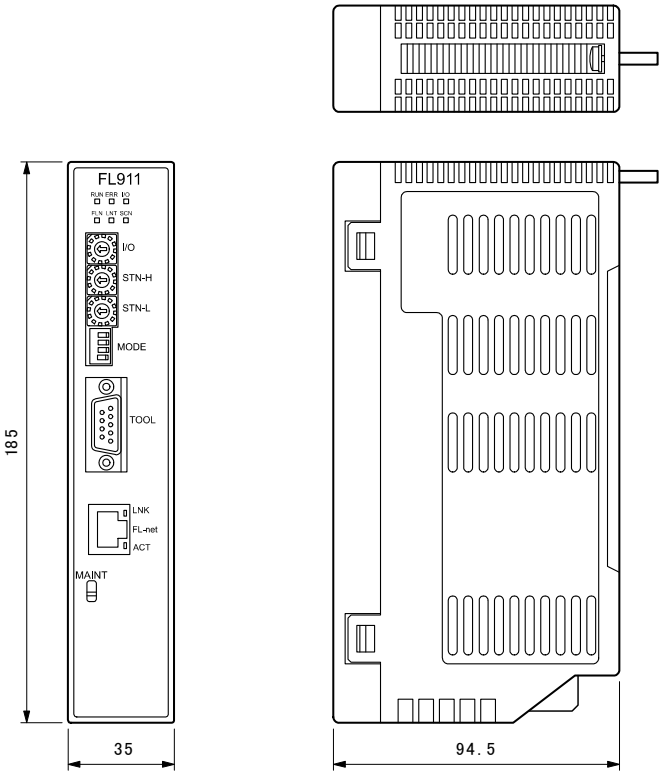

Fig. 8 FL911/ MD911/ EN911 outside dimensions

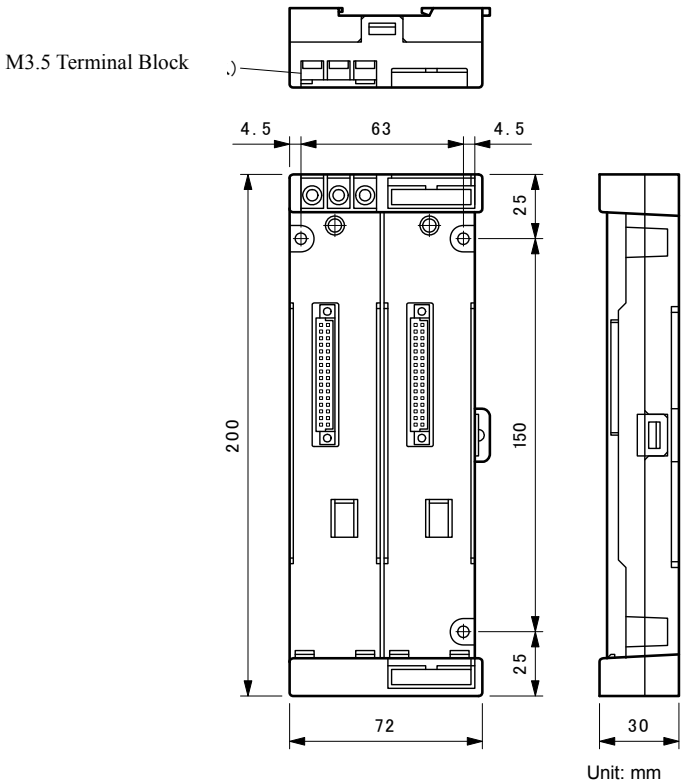

Fig. 9 BU901 outside dimensions

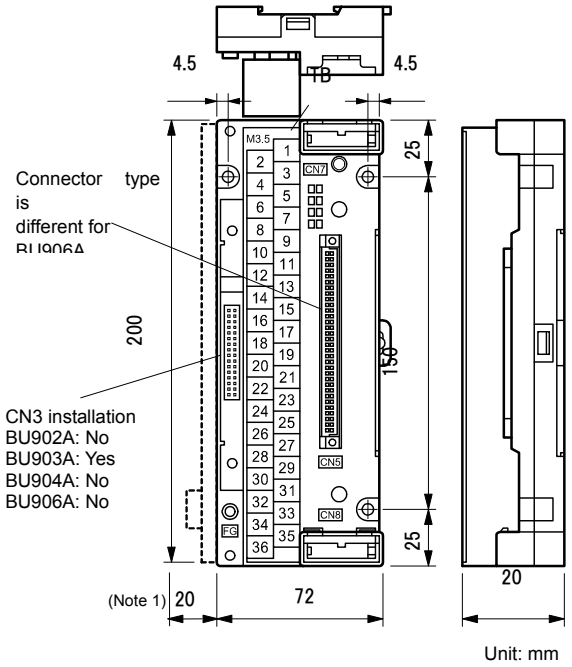

(Note 1) The common bar/short bar can be attached to BU902A/903A/904A/906A, however, make sure to secure this wiring space because the maximum of 20mm of wiring terminal will protrude to the left.

Fig. 10 BU902A/903A/904A/906A outside dimensions

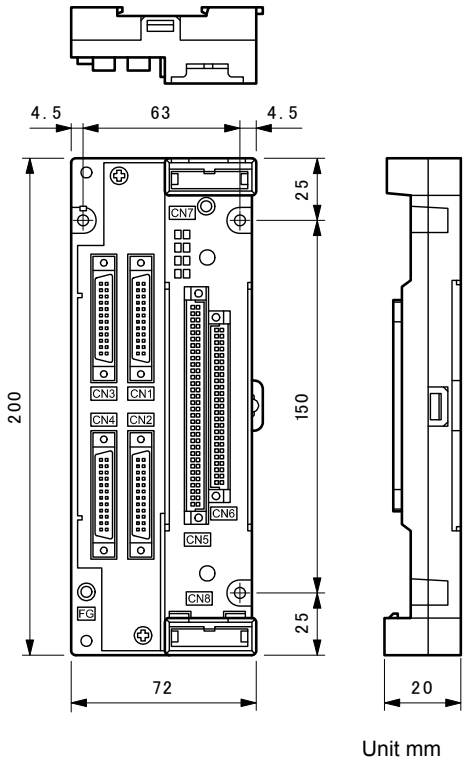

Fig. 11 BU905 outside dimensions

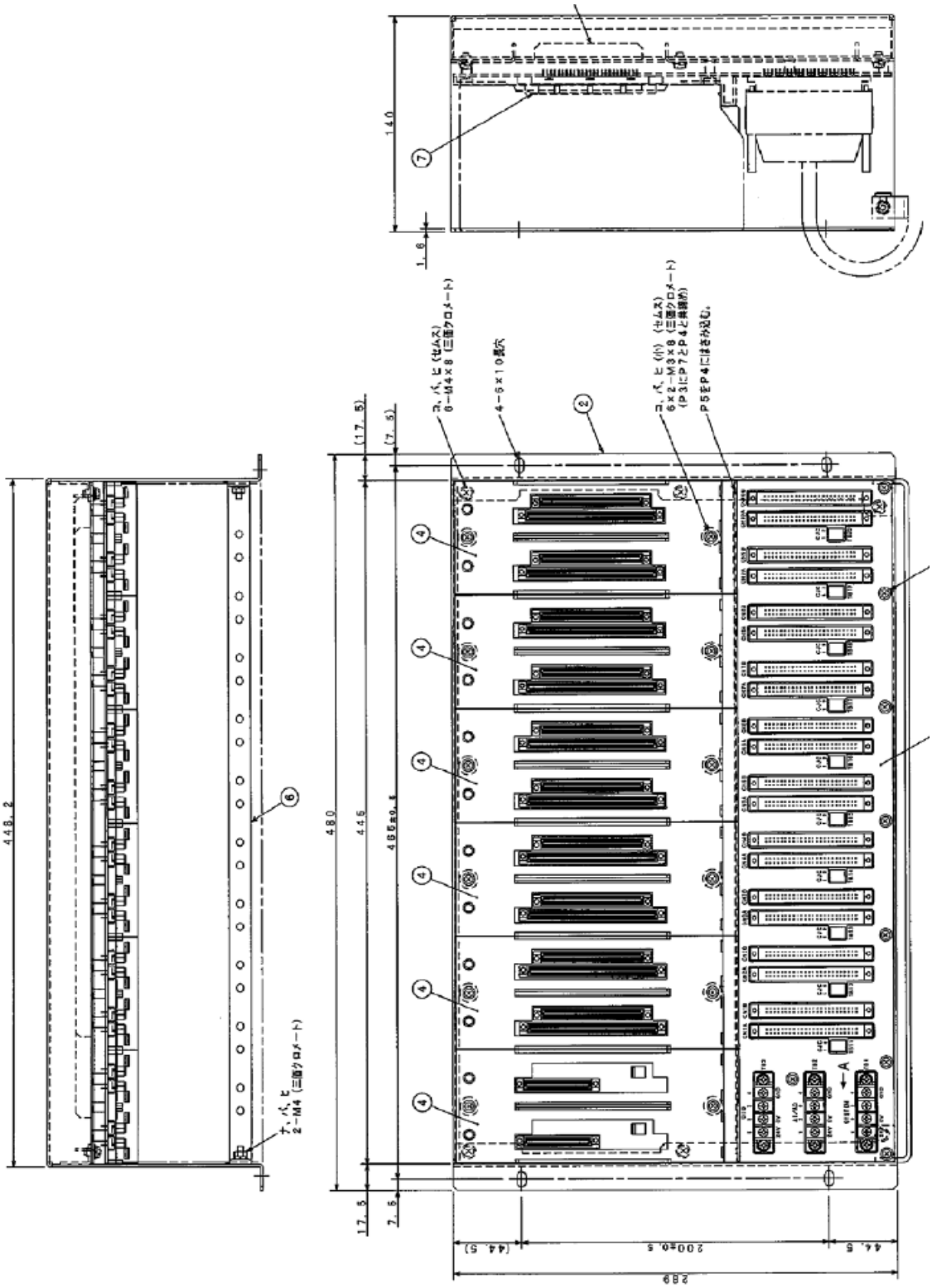

Fig. 12 Horizontal I/O Base unit BU927F outside dimensions

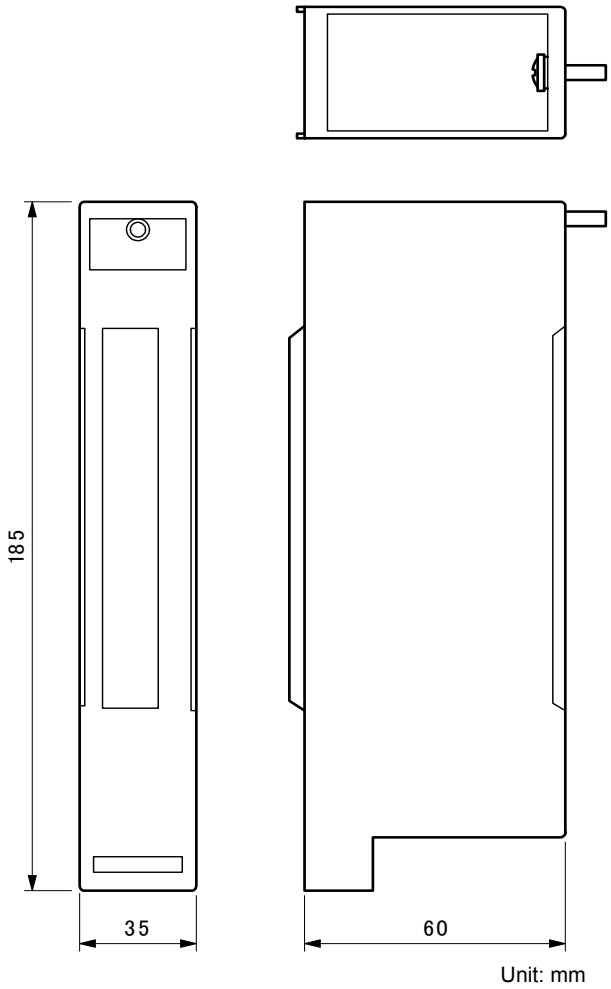

Fig. 13 EX911/EX912 outside dimensions

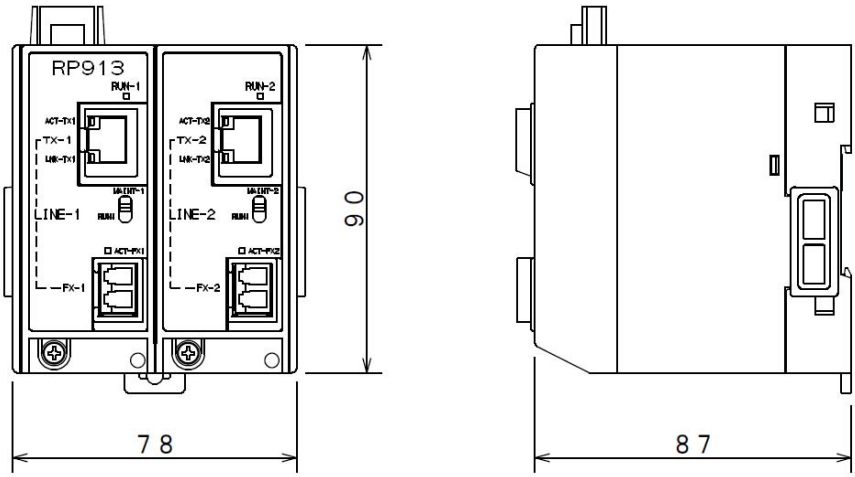

Fig. 14 RP913 outside dimension

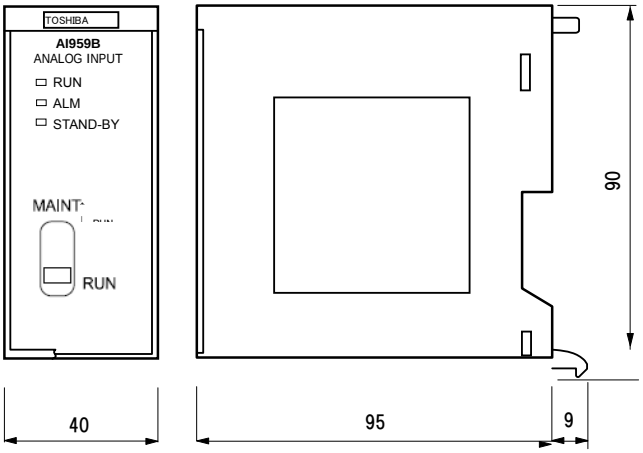

Fig. 15 AI959B outside dimensions

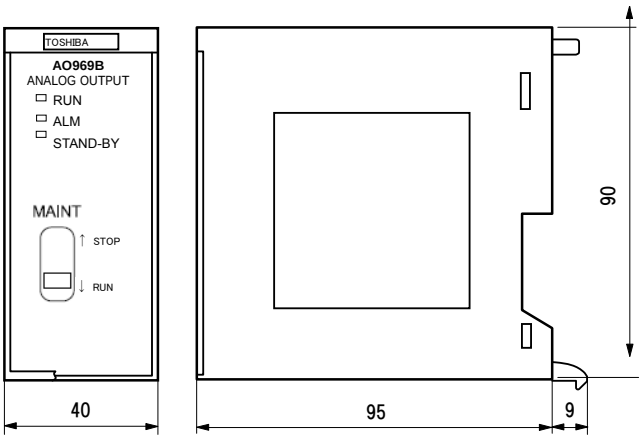

Fig. 16 AO969B outside dimensions

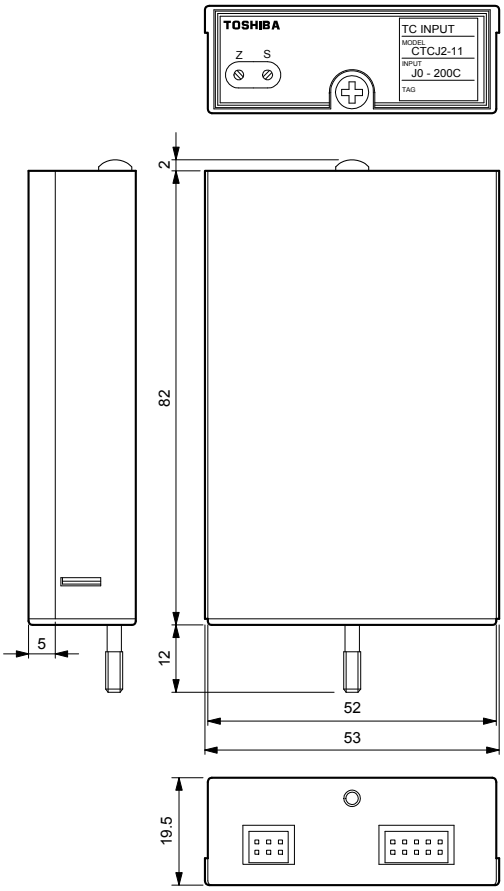

Fig. 17 Signal conditioner outside dimensions

Appendix4. Document list of nv system components for DCS

4.1 nv Series Instruction Manuals

	Title	Doc. No.
Controller		
	Controller Unit Instruction Manual	6F8C1220
	type 1 Function Manual	6F8C1221
	type 2 Function Manual	6F8C1362
	nv series / V series Programming Instructions (LD/FBD/SFC/ST)	6F8C1226
	nv series / V series Engineering Tool - Set Up	6F8C1291
	nv series / V series Engineering Tool - BASIC -	6F8C1290
Station Bus module		
	Ethernet (EN811) Module Instruction Manual	6F8C1358
	Ethernet (FN812) Module Instruction Manual	6F8C1361
	TC-net 100 (TN8) Module Instruction Manual	6F8C1360
TC-net I/O		
	High-speed Special I/O System TC-net I/O Instruction Manual	6F8C1240
	Instrumentation I/O Instruction Manual	6F8C1381
	Fl-net(FL911) module Instruction Manual	6F8C1375
	TC-net IO system 8ch-Pulse Input Module PI918 Functional Manual	6F8C1370
	TC-net IO system 4ch-Bi-Pulse Input Module PI924 Functional Manual	6F8C1371
	PROFIBUS (PA912) Module Instruction Manual	6F8C1259
	G3-I/O Adapter (IA931) Module Instruction Manual	6F8C1348
	MODBUS(MD911) module Instruction Manual	6F8C1399
	Ethernet(EN911) module Instruction Manual	6F8C1400
Packages		
	TC-net100 OPC Server Setting Tool Instruction Manual	6F8C1369
	TC-net100 OPC Server Instruction Manual	6F8C1368
	TC-net100 OPC Client Software Instruction Manual	6F8C1385
	TC-net100 JTNI Scan Memory Access Software Instruction Manual	6F8C1390

4.2 TOSDIC-CIE DS Instruction Manuals

	Title	Doc. No.
Common		
	Installation and Wiring Manual	6F8C0764
	Application Guide	6F8C0775
	Process Control Message Protocol(PCMP)	6F8C0749
OIS-DS		
	Keyboard Controller JOKC1 Operator's Keyboard UOPK8UE Instruction Manual	6F8C0808
	Standard Screen Operation Manual	6F8C0770
	Tag Pattern Manual	6F8C0792
	Graphic Editor (Ver.4) Instruction Manual	6F8C1096
	Graphic Simulator Instruction Manual	6F8C0831
	OIS-DS Report Function For Excel 2013 Instruction Manual	6F8C1510
	OIS-DS53, OIS-DS63, OIS-DS/SMART, SVR-DS63 Windows 7 Version Installation Manual	6F8C1442
	OIS-DS/SMART System Function Manual	6F8C1001
SVR-DS		
	System Function Manual	6F8C0791
	OIS-DS/SVR-DS Application Construction Environment Guide	6F8C0786

	Title	Doc. No.
	OIS-DS63/SVR-DS63 Application Construction Environment Guide	6F8C1321
	SVR-DS Standard Software Instruction Manual	6F8C0970
Packages		
	Open Network Service Support Package for PC Operation Manual	6F8C0793
	Open Network Service Support Package for Windows 7/Windows Server 2008 Instruction Manual	6F8C1322
	PLC Connection Function Operation Manual	6F8C0785
	PLC Connection Function Operation Manual for Windows 7	6F8C1453
	PLC Connection Function OPC Client Support Manual	6F8C1452
	OIS-DS/SMART PLC Connection Function Operation Manual	6F8C1039
	PLC Connection Function L1 Programming Manual	6F8C1050
	Real Time Trend Instruction Manual	6F8C0800
	OPC Server (DA2.0) Instruction Manual	6F8C0787
	OPC AE Server Instruction Manual	6F8C1113
	16-Tag Group Package Instruction Manual	6F8C0805
	2PC Tag Support Package Instruction Manual	6F8C0806
	DPCS Package Instruction Manual	6F8C0802
	SVR Service Control Package Instruction Manual	6F8C0909
	Advanced Hardcopy Instruction Manual	6F8C0919
	Historical Data Auto Save Package Instruction Manual	6F8C1046
	2CRT OIS Package Instruction Manual	6F8C1087
	Remote OIS Package Instruction Manual	6F8C1088
	OIS-DS Part 11 Package Instruction Manual	6F8C1115
	OIS Navigation Package Instruction Manual	6F8C1432
	Alarm Management Package Instruction Manual	6F8C1477
PCS Connection		
	ADMAP/Ethernet Gateway Instruction Manual	6F8C1300
	DS Tag Convert Package Software Instruction Manual	6F8C1301
Engineering Tool		
	OIS-DS Engineering Tool Instruction Manual	6F8C0766
	PCS-DS Engineering Tool Instruction Manual	6F8C0765
	PLC Server Engineering Tool [Ver. 2.0] Instruction Manual	6F8C1038

TOSDIC-CIE DS/nv - General Description for DCS

June 1, 2013 Second Edition

TOSHIBA CORPORATION

Social Infrastructure Systems Company

Automation Products & Facility Solution Division

1-1. Shibaura 1-Chome, Minato-ku, Tokyo 105-8001, Japan